HS394-6&HS404-4标配图册
目录 Content
一、车架 Frame
二、发动机 Engine
三、后桥 Rear Differential
四、前桥 Front Differential
五、进气 In-take System
六、冷却 Cooling System
七、排气 Exhaust System
八、油箱 Fuel Tank
九、前悬架 Front Supension
十、后悬架 Rear Supension
十一、前轮半轴 Front CV Shaft
十二、后轮半轴 Rear CV Shaft
十三、方向机 Steering System
十四、碟刹 Disc Brake System
十五、换挡 Shift System
十六、驻车 Parking System
十七、制动、油门踏板 Brake System & Accelerator System
十八、传动轴 Transmission Shaft
十九、座垫组件 Seat Components
二十、安全带
二十一、棚杆 ROPS
二十二、保险杠、卷扬机 Bumper & Winch
二十三、左下车门 Lower Door(L)
二十四、右下车门 Lower Door(R)
二十五、货厢门 Cargo Bed Tailgate
二十六、货箱 Cargo Bed
二十七、覆盖件 Hood Components
二十八、电器件 Electric Parts

图册变更记录			
日期	相关通知号	更改标记颜色及特殊说明	整改人

一、车架 Frame

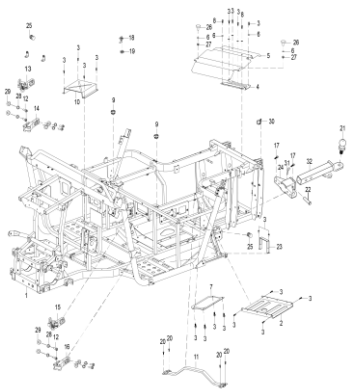

序号N	零部件图号 PartNo.	存货编码	零部件名称及规格	Description	数量Q	易损件	备注 REMARK
1	51100-333006-0000	P333006511000000	车架焊接部件	Frame Assembly	1		
2	51920-315001-0000	P315001519200000	后桥隔热板	Rear Differential Heat Protector	1		
3	GB/T16674-M6×16	BGB16674-M6×16	六角法兰面螺栓M6×16	Bolt Hexagon Flange Head M6×16	14+4		
4	51771-338001-0000	P338001517710000	隔热板固定支架Ⅰ	Heat Protector Attach BracketⅠ	1		
5	51516-338001-0000	P338001515160000	消声器隔热板	Muffler Heat Protector	1		
6	GB/T97.1-8	BGB97.1-8	平垫8	Plain Washer 8	8		
7	51680-338001-0000	P338001516800000	车架底板视窗板	Maintainence Cover, Frame Skid Plate	1		
8	GB/T16674-M6×20	BGB16674-M6×20	六角法兰面螺栓M6×20	Bolt Hexagon Flange Head M6×20	2		
9	93340-J00000-0001	PJ00000933400001	座垫插销橡胶座	Rubber Grommet	2		
10	51555-315001-0000	P315001515550000	脚踏板支撑板	Foot Pedal Bracket	1		
11	51554-315001-0000	P315001515540000	座椅支撑组合Ⅰ	Seat Support Ⅰ	1		
12	GB/T 16674-M8×35	BGB16674-M8×35	六角法兰面螺栓M8×35	Hexagon Flange Bolt M8×35	16		
13	~~84584-338001-0100~~	~~P338001845840100~~	~~右车门铰链Ⅱ~~	~~Right Door Hinge Ⅱ~~	~~1~~		
	84584-338001-0001	P338001845840001	右车门铰链Ⅱ	Right Door HingeⅡ			H技字【2025年】第 329 号车门铰链烤漆工艺
14	84582-338001-0000	P338001845820000	右车门铰链Ⅰ	Right Door HingeI	1		
15	~~84583-338001-0100~~	~~P338001845830100~~	~~左车门铰链Ⅱ~~	~~Left Door Hinge Ⅱ~~	~~1~~		
	84583-338001-0001	P338001845830001	左车门铰链Ⅱ	Left Door HingeⅡ			H技字【2025年】第 329 号车门铰链烤漆工艺
16	84581-338001-0000	P338001845810000	左车门铰链Ⅰ	Left Door HingeI	1		
17	90348-J00000-0500	PJ00000903480500	六角法兰面螺栓、弹垫和平垫组合件M10×28	Hexagon Bolt,Spring Washer&Plain Washer Assy M10×28	2		
18	82211-311001-0000	P311001822110000	旋扭开关	Lock - Battery Box Cover	1		
19	93350-J00000-0000	PJ00000933500000	旋钮开关预紧橡胶套	Rubber Washer	1		
20	GB/T16674-M8×20	BGB16674-M8×20	六角法兰面螺栓M8×20	Bolt Hexagon Flange Head M8×20	4		
21	51930-J00000-0500	PJ00000519300500	拖挂球头组合F	Hitch ball F	1		
22	92961-J00000-0200	PJ00000929610200	拖挂插销	Hitch ball latch	1		
23	51556-315001-0000	P315001515560000	蓄电池盒支撑板	Battery Box Strap Plated	1		
24	51910-338001-0000	P338001519100000	后拖挂接头AG	Rear Hitch Receiver AG	1		
25	93358-J00000-0000	PJ00000933580000	车门减震垫Ⅰ	Door Spacer	2		
26	93155-J00000-0200	PJ00000931550200	矩形螺杆减震垫C	Damp Pad C	2		
27	GB/T6177.1-M8	BGB6177.1-M8	六角法兰面螺母M8	Hexagon Flange Nut M8	2		
28	GB/T 93-8	BGB93-8	弹垫8	Spring Washer 8	16		
29	GB/T97.1-8	BGB97.1-8	平垫8	Plain Washer 8	16		
30	44459-315001-0000	P315001444590000	液压油管固定夹Ⅰ	Hydraulic Oil Securing Clip I	1		

一、车架 Frame

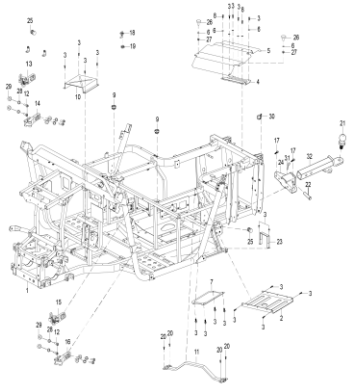

序号N	零部件图号 PartNo.	存货编码	零部件名称及规格	Description	数量Q		备注 REMARK
31	90805-J00000-0100	PJ00000908050100	R型销B	R-pin B	1		
32	51910-J00000-3200	PJ00000519103200	后拖挂接头AH	Rear hitch bar AH	1		

二、发动机 Engine

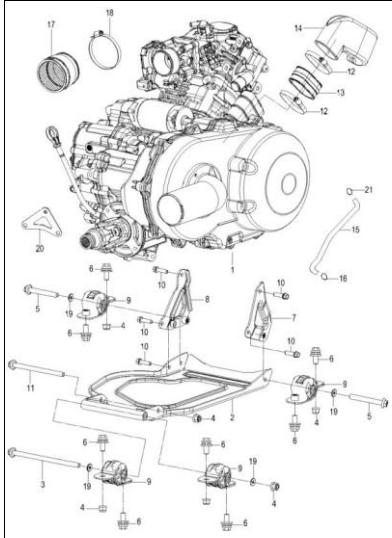

序号N	零部件图号 PartNo.	存货编码	零部件名称及规格	Description	数量Q		备注 REMARK
1	10000-034000-0003	E034000100000003	发动机总成	Engine Assembly for HS394-6	1		HS394-6
	10000-036000-0002	E036000100000002	发动机总成	Engine Assembly for HS404-4			HS404-4
2	00210-321001-0000	P321001002100000	发动机悬挂组合Ⅰ	Engine Cradle I	1	Y	
3	GB/T16674-M10×1.25×290	BGB16674-M10×1.25×290	六角法兰面螺栓M10×1.25×290	Hex Bolt with Flange M10×1.25×290	1		
4	GB/T6183.2-M10×1.25	BGB6183.2-M10×1.25	非金属嵌件六角法兰面锁紧螺母M10×1.25	Nut Lock M10×1.25	6		
5	GB/T16674-M10×1.25×75	BGB16674-M10×1.25×75	六角法兰面螺栓M10×1.25×75	Hex Bolt with Flange M10×1.25×75	2		
6	90348-J00000-0400	PJ00000903480400	六角法兰面螺栓、弹垫和平垫组合件M10×26	Hexagon Bolt,Spring Washer&Plain Washer Assy M10×26	8		
7	00240-321001-0000	P321001002400000	发动机悬挂组合Ⅳ	Engine Cradle IV	1	Y	
8	00230-321001-0000	P321001002300000	发动机悬挂组合Ⅲ	Engine Cradle III	1	Y	
9	0090A-329001-0000	P3290010090A0000	发动机减震座部件	Engine Mount	4	Y	
10	90348-J00000-0600	PJ00000903480600	六角法兰面螺栓、弹垫和平垫组合件M8×20	Hexagon Bolt,Spring Washer&Plain Washer Assy M8×20	4		
11	GB/T16674-M10×1.25×170	BGB16674-M10×1.25×170	六角法兰面螺栓M10×1.25×170	Hex Bolt with Flange M10×1.25×170	1		
12	90730-J00000-0800	PJ00000907300800	螺钉锁紧抱箍I	Lock Clamp I	2	Y	
13	17217-321001-0000	P321001172170000	离合器出气管连接套Ⅰ	Clutch Outlet Tube Connect Sleeve II	1	Y	
14	17216-321001-0000	P321001172160000	离合器出气管	Clutch Air Outlet Duct	1		
15	18801-315001-0000	P315001188010000	废气回收管Ⅰ	Wastergas Recycle Tube I	1		
16	90710-J00000-0700	PJ00000907100700	弹性抱箍H	Spring Clamp	1		
17	82414-107000-0000	P107000824140000	进气滤网	Inlet Filter	1		
18	90730-J00000-0900	PJ00000907300900	螺钉锁紧抱箍J	Narrow Band Clamp	1	Y	
19	90605-J00000-0300	PJ00000906050300	平垫φ10×φ25×3	Plain Washφ10×φ25×3	4		
20	19027-321001-0000	P321001190270000	水管固定板	Water Pipe Retention Plate	1		
21	90710-J00000-0600	PJ00000907100600	弹性抱箍G	Spring Clamp	1		

三、后桥(差速) Rear Axle With Differential

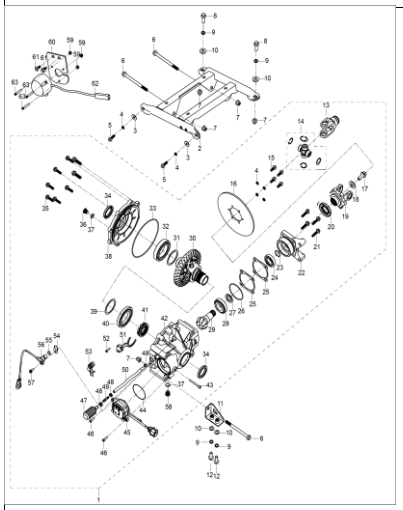

序号N	零部件图号 PartNo.	存货编码	零部件名称及规格	Description	数量Q		备注 REMARK
1	~~27200-338001-0000~~	~~P338001272000000~~	~~后桥部件（带差速）~~	~~Rear Differenttial Assembly (w/ Lock or Unlock) for HS404-4~~	~~1~~		~~HS404-4~~
	27200-338001-0001	P338001272000001	后桥部件（带差速）	Rear Differenttial Assembly (w/ Lock or Unlock) for HS404-4	1	Y	HS404-4
2	51921-333006-0000	P333006519210000	后桥安装支架	Rear Differenttial Mounting Bracket	1		
3	GB/T97.1-8	BGB97.1-8	平垫8	Plain Washer 8	2		
4	GB/T 93-8	BGB93-8	弹垫8	Spring Washer 8	6		
5	GB/T16674-M8×20	BGB16674-M8×20	六角法兰面螺栓M8×25	Bolt Hexagon Flange Head M8×25	2		
6	GB/T16674-M10×1.25×102	BGB16674-M10×1.25×102	六角法兰面螺栓M10×1.25×102	Bolt Hexagon Flange Head M10×1.25×102	3		
7	GB/T6183.2-M10×1.25	BGB6183.2-M10×1.25	非金属嵌件六角法兰面锁紧螺母M10×1.25	Nut Lock M10×1.25	5		
8	GB/T16674-M10×1.25×30	BGB16674-M10×1.25×30	六角法兰面螺栓M10×1.25×30	Bolt Hexagon Flange Head M10×1.25×30	2		
9	GB/T93-10	BGB93-10	弹垫10	Spring Washer 10	4		
10	GB/T97.1-10	BGB97.1-10	平垫10	Plain Washer 10	4		
11	51601-338001-0000	P338001516010000	后桥安装支耳	Rear Differenttial Mounting Lug	1		
12	90348-J00000-0500	PJ00000903480500	六角法兰面螺栓、弹垫和平垫组合件M10×28	Hexagon Bolt,Spring Washer&Plain Washer Assy M10×28	2		
13	25400-J00000-2401	PJ00000254002401	节叉Z	Yoke Z	1		
14	25500-J00000-0401	PJ00000255000401	十字节部件φ25	U-Joint	1		
15	GB/T16674-M8×20	BGB16674-M8×20	六角法兰面螺栓M8×20	Bolt Hexagon Flange Head M8×20	4		
16	44457-309101-0000	P3150014445700000	驻车碟刹片	Brake disc	1	Y	
17	GB/T16674-M12×1.25×30	BGB16674-M12×1.25×30	六角法兰面螺栓M12×1.25×30	He×agon Flange Bolt M12×1.25×30	1		
18	27246-034000-0000	P034000272460000	M12平垫	Plain Washer M12	1		
19	26531-034000-0000	P034000265310000	H22L-F02 后桥内节叉	H22L-F02 Rear Differential Internal Yoke	1		
20	26204-034000-0000	P034000262040000	2-油封	Seal 2	1	Y	
21	GB/T16674-M8×35	BGB16674-M8×35	六角法兰面螺栓M8×35	He×agon Flange Bolt M8×35	4		
22	26225-034000-0000	P034000262250000	H22-F 输入轴承座	H22-F Input Bearing Carrier	1		
23	26265-034000-0000	P034000262650000	O型圈	O-ring	1	Y	
24	91106000004	91106000004	圆锥滚子轴承30205(GCr15)	Bearing Roller Ball 30205(GCr15)	1		
25	27229-034000-0000	P034000272290000	超越直齿输入轴承座垫片	Input Bearing Carrier Pad	2		
26	GB3452．1-92O	BGB3452．1-92O	型橡胶密封圈70×3.2	O-ring 70×3.2	1	Y	
27	27243-034000-0000	P034000272430000	轴承支撑隔套	Bearing Support Sleeve	1		
28	91106000003	91106000003	圆锥滚子轴承30206GCr15	Bearing Roller Ball 30206GCr15	1		
29	26205-034000-0000	P034000262050000	H22L-F02后桥左旋齿轮轴	H22L-F02 Rear Differential Gear Shaft (L)	1		
30	26250-036100-0000	P036100262500000	H22L-F02右旋差速器总成	H22L-F02 Rear Differential Gear Shaft (R)	1		
31	26207-034000-0000	P034000262070000	差速器调整垫片	Differential Adjusting Gasket	1		

三、后桥(差速) Rear Axle With Differential

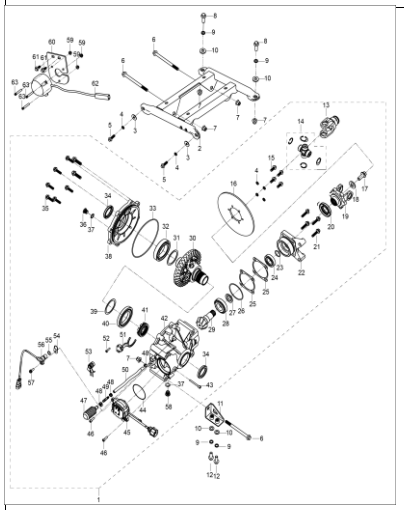

序号N	零部件图号 PartNo.	存货编码	零部件名称及规格	Description	数量Q		备注 REMARK
32	91102000015	91102000015	深沟球轴承6011	Bearing 6011	1		
33	26203-034000-0000	P034000262030000	H22-F 合箱O型圈165X3.1	H22-F O-ring 165X3.1	1	Y	
34	26212-034000-0000	P034000262120000	唇形密封圈FB型B44 55-40-8	O-ring B44 55-40-8	2	Y	
35	GB/T16674-M8×30	BGB16674-M8×30	六角法兰面螺栓M8×30	Bolt hexagon flange head M8×30	8		
36	26221-034000-0000	P034000262210000	加油螺栓M14×1.25	Oil Fill Plug M14×1.25	1		
37	26222-034000-0000	P034000262220000	垫片 14×20×1	Gasket 14×20×1	2		
38	26202-034000-0000	P034000262020000	H22-F箱盖	H22-F Case Cover	1		
39	26207-034000-0000	P034000262070000	差速器调整垫片	Differential Adjusting Gasket	1		
40	91102000014	91102000014	深沟球轴承16011	Deep-groove Ball Bearing 16011	1		
41	26266-036100-0000	P036100262660000	拨套A	Fork Bush A	1		
42	26201-036100-0000	P036100262010000	H22L-F02箱体	H22-F Case Body	1		
43	90064000003	90064000003	内六角凹端紧定螺钉-放油	Drain Plug	1		
44	27032-034000-0000	P034000270320000	O型圈 66×1.9	O-ring 66×1.9	1	Y	
45	27031-034000-0000	P034000270310000	890-执行电机总成	890-Actuator Motor	1	Y	
46	27030-034000-0000	P034000270300000	GB／T 70.1- 2008[内六角圆柱头螺钉M6×20]	Hexagon Socket Head Screw M6×20	2		
47	27021-034000-0000	P034000270210000	气囊	Airbag	1		
48	27022-034000-0000	P034000270220000	无耳卡箍-13.3	Clamp -13.3	3		
49	27023-034000-0000	P034000270230000	气囊连接头	Connector	1		
50	27025-034000-0000	P034000270250000	油管 260	Oil Pipe 260	1		
51	27272-034000-0000	P034000272720000	H2-N上折拨叉2.0	H2-N Fork 2.0	1		
52	GB/T70．1-2000	BGB70．1-2000	内六角圆柱头螺钉M5×18	Hexagon Socket Head Screw M5×18	1		
53	26330-36100-0000	P036100263300000	摆杆组件	Swing Link	1		
54	26032-034000-0000	P034000260320000	速度传感器调整垫片	Speed Sensor Adjust Gasket	2		
55	GB_T3452.1-1992	BGB3452.1-12.1×1.8	O形圈_通用型 12.1X1.8	O-ring 12.1X1.8	1		
56	26030-034000-0000	P034000260300000	速度传感器	Speed Sensor	1		
57	GB/T 70.1- 2008	BGB70.1- 2008	内六角圆柱头螺钉M6×20	Hexagon Socket Head Screw M6×20	1		
58	27221-034000-0000	P034000272210000	放油螺栓M14×1.25	Drain Plug M14×1.25	1		
59	GB/T6177.1-M5	BGB6177.1-M5	六角法兰面螺母M5	Hexagon Flange Nut M5	3		
60	51642-115000-0000	P115000516420000	拖挂插座安装板	Hitch Bar Socket Mounting Plate	1		
61	GB/T16674-M6×16	BGB16674-M6×16	六角法兰面螺栓M6×16	Bolt hexagon flange head M6×16	2		

三、后桥(差速) Rear Axle With Differential

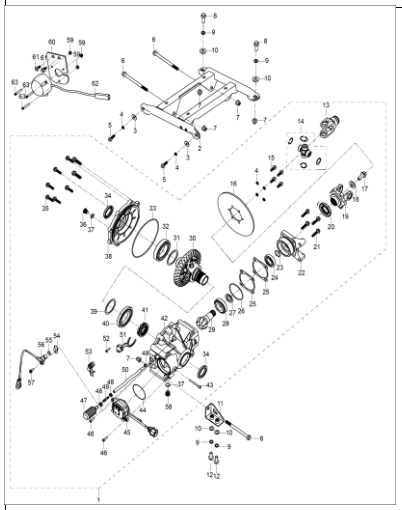

序号N	零部件图号 PartNo.	存货编码	零部件名称及规格	Description	数量Q		备注 REMARK
62	37185-333006-0000	P333006371850000	拖车插座组合	Trailer socket Assy	1		
63	GB/T818-M5×35	BGB818-M5×35	十字槽盘头螺钉M5×35	Cross Recessed Screw M5×35	3		

三、后桥(无差速) Rear Axle Without Differential

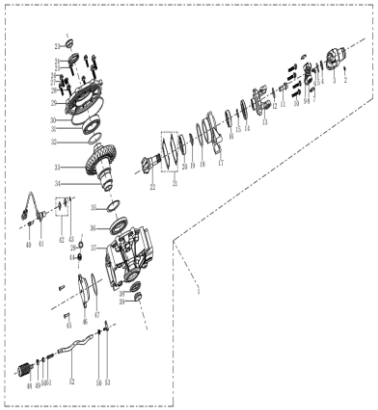

序号N	零部件图号 PartNo.	存货编码	零部件名称及规格	Description	数量Q		备注 REMARK
1	27200-338001-0100	P338001272000100	后桥部件（不带差速）	Rear Differenttial Assembly (w/o Lock or Unlock)	1	Y	HS394-6
2	26544-034000-0000	P034000265440000	M6黄油嘴	M6 Grease Fitting	1		
3	26532-034000-0000	P034000265320000	H22L-F02后桥外节叉	H22L-F02 Rear Differential External Yoke	1		
4	27248-034000-0000	P034000272480000	堵头	Plug	1		
5	91004000013	91004000013	GB893．1-86孔用弹性挡圈A型28	Circlip 28A	1		
6	26544-034000-0000	P034000265440000	黄油嘴	Grease Fitting	1		
7	91004000012	91004000012	GB893．1-86孔用弹性挡圈25A型	Circlip 25A	1		
8	26224-034000-0000	P034000262240000	轴承套	Bearing Housing	4		
9	26543-034000-0000	P034000265430000	十字轴	U-Joint Assy	1		
10	GB/T 5787-M8×35	BGB5787-M8×35	六角法兰螺栓（加大系）M8	Hexagon Flange Bolt M8	4		
11	GB/T 5787-M12×1.25×30	BGB5787-M12×1.25×30	六角头法兰面螺栓M12X1.25-右旋-30	Hexagon Flange Bolt M12X1.25	1		
12	27246-034000-0000	P034000272460000	M12平垫	Plain Washer M12	1		
13	26531-034000-0000	P034000265310000	H22L-F02 后桥内节叉	H22L-F02 Rear Differential Internal Yoke	1		
14	26204-034000-0000	P034000262040000	2-油封	Seal 2	1	Y	
15	26265-034000-0000	P034000262650000	O型圈	O-ring	1	Y	
16	91106000004	91106000004	圆锥滚子轴承30205[GB／T297-94]GCr15	Bearing Roller Ball 30205	1		
17	26225-034000-0000	P034000262250000	H22-F输入轴承座	Input Bearing Carrier H22-F	1		
18	26211-034000-0000	P034000262110000	GB3452．1-92O型橡胶密封圈70×3．2	O-ring 70×3.2	1	Y	
19	27243-034000-0000	P034000272430000	轴承支撑隔套	Bearing Support Sleeve	1		
20	91106000003	91106000003	圆锥滚子轴承30206[GB／T297-94]GCr15	Bearing Roller Ball 30206	1		
21	27229-034000-0000	P034000272290000	超越直齿输入轴承座垫片	Input Bearing Carrier Pad	2		
22	26205-034000-0000	P034000262050000	H22L-F02后桥左旋齿轮轴	H22L-F02 Rear Differential Gear Shaft (L)	1		
23	26269-034000-0000	P034000262690000	H22L-F02堵头	H22L-F02 Plug	2		
24	26212-034000-0000	P034000262120000	唇形密封圈FB型B44	Gasket B44	2		
25	GB/T 5787-M8×30	BGB5787-M8×30	六角法兰螺栓（加大系）	Bolt Hexagon Flange Head	6		
26	GB/T 5787-M10×1.25×35	BGB5787-M10×1.25×35	六角头法兰面螺栓(小系列)M10X1.25	Hexagon Flange Bolt M10X1.25	2		
27	26221-034000-0000	P034000262210000	放油螺栓	Drain Plug	1		
28	26222-034000-0000	P034000262220000	放油孔垫片	Drain Hole Pad	2		
29	26202-034000-0000	P034000262020000	H22-F箱盖	H22-F Case Cover	1		
30	26203-034000-0000	P034000262030000	H22-F 合箱O型圈	O-Ring H22-F	1	Y	

三、后桥(无差速) Rear Axle Without Differential

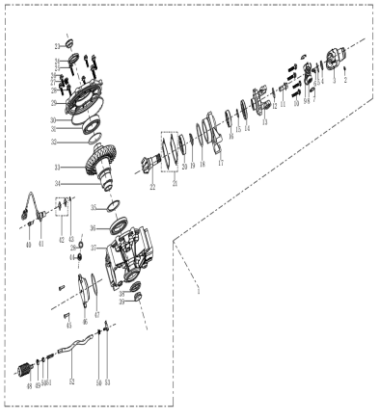

序号N	零部件图号 PartNo.	存货编码	零部件名称及规格	Description	数量Q		备注 REMARK
31	91102000015	91102000015	GB / T276-94深沟球轴承6011	Deep-groove Ball Bearing 6011	1		
32	26207-034000-0000	P034000262070000	差速器调整垫片	Differential Adjusting Gasket	1		
33	26253-034000-0000	P034000262530000	H22L-F03后桥右旋从动齿轮	H22L-F03 Rear Differential Driven Gear (R)	1		
34	26252-034000-0000	P034000262520000	H22L-F03输出轴	Output Shaft H22L-F03	1		
35	26207-034000-0000	P034000262070000	差速器调整垫片	Differential Adjusting Gasket	1		
36	91102000014	91102000014	GB / T276-94深沟球轴承16011	Deep-groove Ball Bearing 16011	1		
37	26201-034000-0000	P034000262010000	H22L-F03箱体	H22L-F03 Case Body	1		
38	26212-034000-0000	P034000262120000	唇形密封圈FB型B44	Gasket B44	2	Y	
39	26269-034000-0000	P034000262690000	H22L-F02堵头	H22L-F02 Plug	2		
40	26049-034000-0000	P034000260490000	内六角圆柱头螺钉、弹簧垫圈和平垫圈组合件 M6X20	Combined Bolt M6X20	1		
41	26030-034000-0000	P034000260300000	速度传感器	Speed Sensor	1	Y	
42	26032-034000-0000	P034000260320000	速度传感器调整垫片	Speed Sensor Adjust Gasket	2		
43	26031-034000-0000	P034000260310000	12.1X1.5 O型圈	O-Ring 12.1X1.5	1		
44	26221-034000-0000	P034000262210000	放油螺栓	Drain Plug	1		
45	27030-034000-0000	P034000270300000	GB／T 70.1-2008[内六角圆柱头螺钉M6×20]	Hexagon Socket Head Screw M6×20	2		
46	26048-034000-0000	P034000260480000	安装端盖壳体	End Cover Housing	1		
47	2604A-034000-0000	P034000260 4A0000	66×2.4 O型圈	O-Ring 66×2.4	1	Y	
48	26025-034000-0000	P034000260250000	气囊	Airbag	1		
49	27022-034000-0000	P034000270220000	无耳卡箍-13.3	Clamp -13.3	1		
50	27024-034000-0000	P034000270240000	无耳卡箍9.4-11.9	Clamp 9.4-11.9	1		
51	27023-034000-0000	P034000270230000	气囊-油管接头	Airbag-Oil Pipe Joint	2		
52	27025-034000-0000	P034000270250000	油管 260	Oil Pipe 260	1		
53	27020-034000-0000	P034000270200000	排气接头	Exhaust Joint	1		

四、前桥 Front Differential

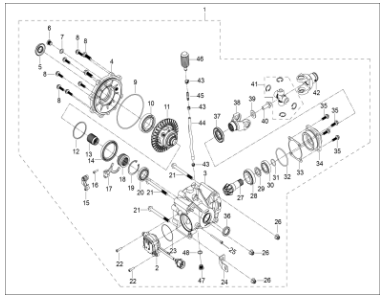

序号N	零部件图号 PartNo.	存货编码	零部件名称及规格	Description	数量Q		备注 REMARK
1	27100-338001-0000	P338001271000000	前桥部件	Front Differenttial Assembly	1	Y	
2	27031-034000-0000	P034000270310000	执行电机总成	Actuator Motor Assy	1	Y	
3	27201-034000-0000	P034000272010000	H2-N02箱体	H2-N02 Case Body	1		
4	27202-034000-0000	P034000272020000	H2-N02箱盖	H2-N02 Case Cover	1		
5	27213-034000-0000	P034000272130000	唇形密封圈 50×24×7	O-ring 50×24×7	2	Y	
6	27221-034000-0000	P034000272210000	加油螺栓	Drain Plug	1		
7	27222-034000-0000	P034000272220000	加油孔垫片	Oil Fill Gasket	2		
8	GB/T16674-M8×30	BGB16674-M8×30	六角法兰面螺栓M8×30	Bolt hexagon flange head M8×30	8		
9	27203-034000-0000	P034000272030000	H2-N02 O型圈	H2-N02 O-ring	1		
10	91102000013	91102000013	深沟球轴承6009	Deep-groove Ball Bearing 6009	1		
11	27250-036100-0000	P036100272500000	H2-N02差速器总成	H2-N02 Differential Assy	1		
12	27259-034000-0000	P034000272590000	H2-N差速器调整垫片2	H2-N Differential Adjusting Gasket 2	1		
13	27264-034000-0000	P034000272640000	H2-N差速器链接轴套	H2-N Differential Connecting Sleeve	1		
14	911020000120000	911020000120000	深沟球轴承61813	Deep-groove Ball Bearing 61813	1		
15	27330-036100-0000	P036100273300000	摆杆组件	Swing Link	1		
16	GB/T70. 1-2000	BGB70. 1-2000	内六角圆柱头螺钉M5×18	Hexagon Socket Head Screw M5×18	1		
17	27272-034000-0000	P034000272720000	H2-N焊接拨叉组件2.0	H2-N Weld Fork 2.0	1		
18	27265-034000-0000	P034000272650000	H2-N拨套	H2-N Fork Bush	1		
19	91004000011	91004000011	孔用弹性挡圈A型55	Circlip A for Hole 55	1		
20	91102000011	91102000011	深沟球轴承16006	Deep-groove Ball Bearing 16006	1		
21	GB/T16674-M10×1.25×105	BGB16674-M10×1.25×105	六角法兰面螺栓M10×1.25×105	Bolt hexagon flange head M10×1.25×105	3		
22	27030-034000-0000	P034000270300000	内六角圆柱头螺钉M6×20	Hexagon Socket Head Screw M6×20	2		
23	27032-034000-0000	P034000270320000	O型圈66×1.9	O-ring 66×1.9	1		
24	51955-338001-0000	P338001519550000	前桥安装支耳	Front Differenttial Mounting Lug	1		
25	90064000003	90064000003	内六角凹端紧定螺钉	Hexagon Socket Set Screws	1		
26	GB/T6183.2-M10×1.25	BGB6183.2-M10×1.25	非金属嵌件六角法兰面锁紧螺母M10×1.25	Nut Lock M10×1.25	3		
27	27205-034000-0000	P034000272050000	H2-N02前桥右旋齿轮轴	H2-N02 Front Differential Gear Shaft (R)	1		
28	91106000003	91106000003	圆锥滚子轴承30206 GCr15	Bearing Roller Ball 30206 GCr15	1		
29	27243-034000-0000	P034000272430000	轴承支撑隔套	Bearing Support Sleeve	1		
30	91106000004	91106000004	圆锥滚子轴承30205 GCr15	Bearing Roller Ball 30205 GCr15	1		

四、前桥 Front Differential

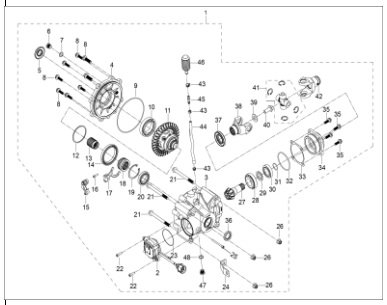

序号N	零部件图号 PartNo.	存货编码	零部件名称及规格	Description	数量Q		备注 REMARK
31	26265-034000-0000	P034000262650000	O型圈	O-ring	1	Y	
32	90701000045	90701000045	GB3452．1-92O型橡胶密封圈70×3．2	O-ring 70×3.2	1	Y	
33	27229-034000-0000	P034000272290000	超越直齿输入轴承座垫片	Input Bearing Carrier Pad	1		
34	27244-034000-0000	P034000272440000	输入轴承座	Input Bearing Carrier	1		
35	GB/T 5787-M8×25	BGB5787-M8×25	六角法兰螺栓（加大系）	Bolt Hexagon Flange Head	4		
36	27212-034000-0000	P034000272120000	输出轴油封24×38×8×12	Output Shaft Seal 24×38×8×12	1	Y	
37	27204-034000-0000	P034000272040000	2-油封	Seal 2	1	Y	
38	27532-034000-0000	P034000275320000	内叉	Internal Yoke	1		
39	27246-034000-0000	P034000272460000	M12平垫	Plain Washer M12	1		
40	90102100018	90102100018	外六角法兰面螺栓M12X1.5-左旋-30	Bolt Hexagon Flange Head M12X1.5	1		35CrMo
41	25500-J00000-0401	PJ00000255000401	十字节部件	U-Joint	1		
42	27531-034000-0000	P034000275310000	H2-N02外叉	H2-N02 Outter Yoke	1		
43	90710-J00000-0400	PJ00000907100400	弹性抱箍E	Spring Clamp E	3		
44	27400-J00000-0300	PJ00000274000300	桥体通气管D-260	Line Fuel	1		
45	27166-116000-0000	P116000271660000	气囊连接头	Connector	1		
46	27118-116000-0000	P116000271180000	气囊	Airbag	1		
47	27221-034000-0000	P034000272210000	放油螺栓	Drain Plug	1		
48	27222-034000-0000	P034000272220000	14×20×1 放油孔垫片	Drain Hole Pad 14×20×1	1		

五、进气系统 In-take System

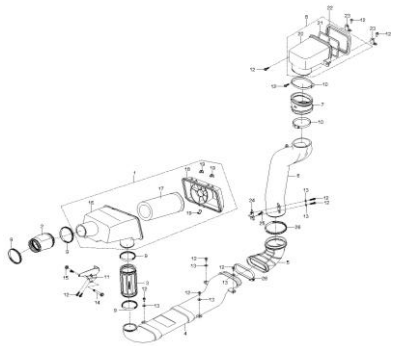

序号N	零部件图号 PartNo.	存货编码	零部件名称及规格	Description	数量Q		备注 REMARK	
1	17200-315001-0000	P315001172000000	次级空滤器部件	Secondary Air Filter Assy	1			
2	17108-338001-0000	P338001171080000	空滤器出气连接套	Air Filter Outlet Tube Connect Sleeve for 394-6	1	Y	HS394-6	
	17108-333007-0000	P333007171080000	空滤器出气连接套	Air Filter Outlet Tube Connect Sleeve for 404-4		Y	HS404-4	
3	~~17213-338001-0000~~	~~P338001172130000~~	~~次级进气管连接套Ⅰ~~	~~Secondary Inlet Tube Connect Sleeve Ⅰ~~	~~1~~	~~Y~~		
	~~17213-315001-0001~~	~~P315001172130001~~	~~次级进气管连接套Ⅰ~~	~~Secondary Inlet Tube Connect Sleeve Ⅰ~~	~~1~~		~~Ⅰ一项编码错误，2025.6.9改~~	
	17213-321104-0000	P321104172130000	次级进气管连接套Ⅰ	Secondary Inlet Tube Connect Sleeve Ⅰ	Y		Ⅱ 技字【2025 年】第 178 号	2025.6.18
4	17212-338001-0000	P338001172120000	次级进气管Ⅰ	Secondary Inlet TubeI	1			
5	17211-338001-0000	P338001172110000	次级出气管连接套Ⅱ	Secondary Outlet Tube Connect Sleeve II	1	Y		
6	17109-315001-0001	P315001171090001	初级出气管	Primary Outlet Tube	1			
7	17109-338001-0000	P338001171090000	初级出气管连接套Ⅰ	Primary Outlet Tube Connect Sleeve I	1	Y		
8	17100-315001-0000	P315001171000000	初级空滤器部件	Primary Air Filter Assy	1			
9	90730-J00000-0800	PJ00000907300800	螺钉锁紧抱箍I	Lock Clamp I	4	Y		
10	90730-J00000-1200	PJ00000907301200	螺钉锁紧抱箍M	Lock Clamp M	2	Y		
11	51535-338001-0000	P338001515350000	空滤器安装板	Air Filter Attach Plate	1			
12	GB/T16674-M6×16	BGB16674-M6×16	六角法兰面螺栓M6×16	Bolt Hexagon Flange Head M6×16	12			
13	GB/T97.1-6-B	BGB97.1-6-B	平垫6	Washer Plat 6	8			
14	GB/T16674-M10×1.25×55	BGB16674-M10×1.25×55	六角法兰面螺栓M10×1.25-55	Bolt Hexagon Flange Head M10×1.25-55	1			
15	GB/T6187-M10×1.25	BGB6187-M10×1.25	金属嵌件六角法兰面锁紧螺母M10×1.25	Hexagon Flange Self-Lock Nuts M10x1.25	1			
16	17201-315001-0000	P315001172010000	次级滤清器体	Secondary Air Filter Body	1			
17	1722A-315001-0000	P3150011722A0000	次级滤清器芯组合	Secondary Air Filter Element	1	Y		
18	17204-315001-0000	P315001172040000	次级滤清器盖	Air Filter Cover	1			
19	17205-312001-0000	P312001172050000	卡扣	Clamp	3			
20	17101-315001-0000	P315001171010000	初级滤清器体	Primary Air Filter Body	1			
21	17112-315001-0000	P315001171120000	初级空滤器过滤网（目数120目）	Primary Air Filter Net	1			
22	17107-315001-0000	P315001171070000	初级空滤器密封圈	Primary Air Filter Seal	1			
23	51694-315001-0000	P315001516940000	初级空滤器支耳	Primary Air Filter Bracket	2			
24	515AZ-338001-0000	P338001515AZ0000	空滤器管固定板	Primary Air Filter Retention Plate	1			
25	GB/T16674-M8×16	BGB16674-M8×16	六角法兰面螺栓M8×16	Bolt Hexagon Flange Head M8×16	1			
26	90730-J00000-1300	PJ00000907301300	螺钉锁紧抱箍N	Clamp N	2	Y		

六、冷却系统 Cooling System

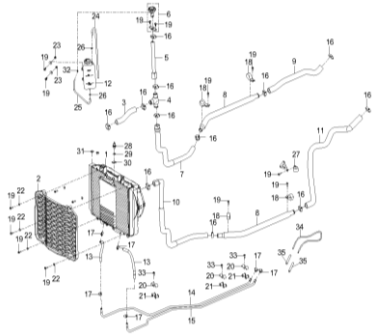

序号N	零部件图号 PartNo.	存货编码	零部件名称及规格	Description	数量Q		备注 REMARK
1	19200-338001-0000	P338001192000000	冷却水箱部件	Radiator Assy	1		
2	82527-309001-000023	P3090018527000023	水箱保护罩（哑黑）	Radiator Cover（Matt Black)	1		
3	19018-309001-0000	P309001190180000	进水管III	Water Inlet Pipe III	1		
4	19002-311001-0000	P311001190020000	进水三通管	Water Inlet Tee pipe	1		
5	19019-309001-0000	P309001190190000	进水管IV	Water Inlet Pipe IV	1		
6	19270-301001-0000	P301001192700000	加水口组合	Water Fill Port Combination	1		
7	19003-315001-0001	P315001190030001	进水管II	Water Inlet Pipe II	1		
8	19012-338001-0000	P338001190120000	金属水管 I	Metallic Water Pipe	2		
9	19001-338001-0000	P338001190010000	进水管 I	Water Inlet Pipe I	1		
10	19005-315001-0001	P315001190050001	出水管II	Water Outlet Pipe II	1		
11	19003-338001-0000	P338001190030000	出水管 I	Water Outlet Pipe I	1		
12	19300-117000-0000	P117000193000000	副水壶部件	Assistant Kettle Assy	1		
13	15504-338001-0000	P338001155040000	耐压橡胶油管 I（L=220mm）	Pressure-resistant Rubber Tube I（L=220mm）	2	Y	
14	15513-309001-0000	P309001155130000	金属油管 I	Metallic Oil Pipe I	1		
15	15515-315001-0000	P315001155150000	金属油管 II	Metallic Oil Pipe II	1		
16	90730-J00000-0300	PJ00000907300300	螺钉锁紧抱箍D	Screw Lock Clamp D	12	Y	
17	90730-J00000-0000	PJ00000907300000	螺钉锁紧抱箍A	Screw Lock Clamp A	6	Y	
18	19015-116000-0000	P116000190150000	水管固定管夹III	Water Pipe Fixing Clamp III	4		
19	GB/T16674-M6×16	BGB16674-M6×16	六角法兰面螺栓M6×16	Bolt Hexagon Flange Head M6×16	11		
20	19017-115000-0000	P115000190170000	M型固定管夹	M-shapr Water Pipe Fixing Clamp	3		
21	15514-115000-0000	P115000155140000	油管工字胶	Oil Pipe Rubber	6		
22	GB/T6177.1-M6	BGB6177.1-M6	六角法兰面螺母M6	Hexagon Flange Head Nut M6	4		
23	92930-J00000-1500	PJ00000929301500	翻边衬套φ6.5×φ22×6.5	Flanged Bushing φ6.5×φ22×6.5	2		
24	19313-338001-0000	P338001193130000	副水壶出水管	Assistant Kettle Water Outlet Pipe	1		
25	16577-116000-0000	P116000165770000	橡胶管(带黄)	Rubber Tube	1	Y	
26	90710-J00000-0200	PJ00000907100200	弹性抱箍C	Elastic Clamp C	3		
27	19014-112000-0000	P112000190140000	水管固定管夹II	Water Pipe Fixing Clamp II	1		
28	36560-315001-0001	P315001365600001	压力传感器	Pressure Sensor	1		
29	90602-J00000-0700	PJ00000906020700	铜垫圈14×21×1	Copper Washer 14×21×1	1		
30	91201-J00000-0700	PJ00000912010700	O形密封圈9x2	O-ring 9x2	1	Y	

六、冷却系统 Cooling System

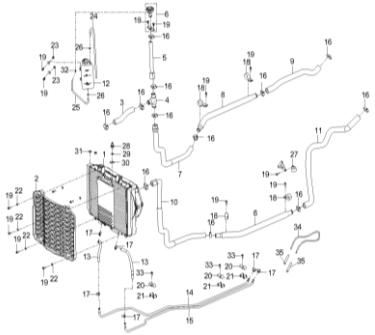

序号N	零部件图号 PartNo.	存货编码	零部件名称及规格	Description	数量Q		备注 REMARK
31	19212-309101-0000	P309101192120000	水冷器安装衬套	Radiator Mounting Bushing	2		
32	90710-J00000-0300	PJ00000907100300	弹性抱箍D	Elastic Clamp D	1		
33	GB/T16674-M6×12	BGB16674-M6×12	六角法兰面螺栓M6×12	Hexagon Bolt M6×12	3		
34	15307-014000-0000	P014000153072200	橡胶油管2200	Rubber Oil Tube 2200	1		
35	15207-003000-0000	P003000152070000	发泡管	Foamed Tube	2		

七、排气系统 Exhaust System

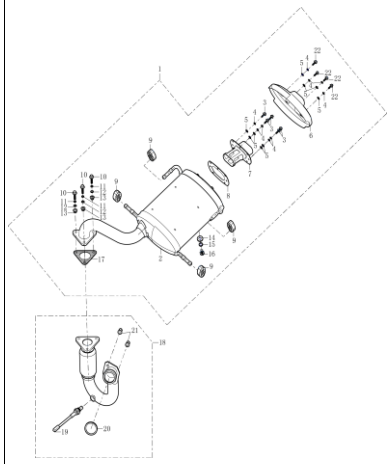

序号N	零部件图号 PartNo.	存货编码	零部件名称及规格	Description	数量Q		备注 REMARK
1	18100-338001-0000	P338001181000000	消声器部件	Muffler	1		
2	18X00-338001-0000	P33800118X000000	消声器焊接组合	Muffler Weld Kit	1		
3	GB/T16674-M6×16-B	BGB16674-M6×16-B	六角法兰面螺栓M6×16(不锈钢)	Bolt Hexagon Flange Head M6×16(Stainless Steel)	5		
4	GB/T93-6-B	BGB93-6-B	弹垫6(不锈钢)	Spring Washer 6(Stainless Steel)	9		
5	GB/T97.1-6-B	BGB97.1-6-B	平垫6(不锈钢)	Plain Washer 6(Stainless Steel)	9		
6	18315-3338001-0000	P338001183150000	消声器装饰盖	Muffler Cover	1		
7	1830A-338001-0000	P3380011830A0000	排气尾管焊接组合	Exhaust Tube Weld Assy	1		
8	18012-338001-0000	P338001180120000	隔热密封垫	Insulate Seal Gasket	1		
9	0060A-J00000-0000	PJ000000060A0000	消声器减震垫组合	Muffler Damping Pad	4		
10	GB/T97.1-8	BGB97.1-8	平垫8	Plain Washer 8	3		
11	GB/T93-8	BGB93-8	弹垫8	Spring Washer 8	3		
12	GB/T16674-M8×30	BGB16674-M8×30	六角法兰面螺栓M8×30	Bolt hexagon flange head M8×30	3		
13	GB/T6187-M8	BGB6187-M8	金属嵌件六角法兰面锁紧螺母M8	Lock Nut M8 for HS404-4	3		
14	GB/T97.1-10	BGB97.1-10	平垫10	Plain Washer 10	1		
15	GB/T93-10	BGB93-10	弹垫10	Spring Washer 10	1		
16	GB/T5783-M10×1.25×16	BGB5783-M10×1.25×16	六角头螺栓M10×1.25×16	Bolt Hexagon Flange Head M10×1.25×16	1		
17	18024-318001-0000	P318001180240000	排气管密封垫	Exhaust Tube Gasket	1		
18	1821A-338001-0000	P3380011821A0000	排气管焊接组合Ⅰ	Exhaust Tube Welding KitIfor HS394-6	1		HS394-6
	1821A-322103-0000	P3221031821A0000	排气管焊接组合Ⅰ	Exhaust Tube Welding KitIfor HS404-4			HS404-4
19	39160-116000-0010	P116000391600010	氧传感器	Oxygen Sensor	1	Y	
20	18020-J00000-0800	PJ00000180200800	排气管密封圈φ54.5×φ44.5×5.5	O-ring φ54.5×φ44.5×5.5	1	Y	
21	90346-J00000-0300	PJ00000903460300	盖型螺母M8×22	Cap Nut M8×22	2		
22	GB/T70.2-M6×25-B	BGB70.2-M6×25-B	内六角平圆头螺钉M6×25	Bolt M6×25	4		

八、油箱组件 Fuel Tank

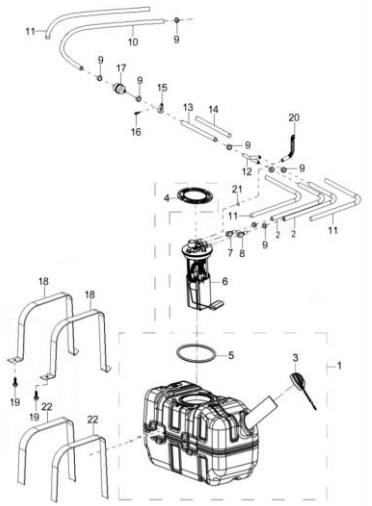

序号N	零部件图号 PartNo.	存货编码	零部件名称及规格	Description	数量Q		备注 REMARK
1	81100-115H00-2000	P115H00811002000	燃油箱组合	Fuel Tank Assy	1		
2	16512-318001-0000	P318001165120000	高压燃油管II	High Pressure Fuel Line II	2		
3	81140-315001-0000	P315001811400000	油箱盖	Fuel Tank Cap	1		
4	81152-301001-0000	P301001811520000	燃油泵卡盘	Fuel Pump Securing Clip	1		
5	93380-J00000-0400	PJ00000933800400	燃油泵密封垫E	Fuel Pump Sealing Pad E	1	Y	
6	39500-309001-0000	P309001395000000	燃油泵部件	Fuel Pump Assy	1	Y	
7	16521-116000-0000	P116000165210000	出油插头	Fuel Outlet Plug	1		
8	16522-116000-0000	P116000165220000	进油插头	Fuel Inlet Plug	1		
9	90720-J00000-0000	PJ00000907200000	压紧抱箍A	Compress Clamp A	8	Y	
10	16511-110000-0000	P110000165110000	高压燃油管I	High Pressure Fuel Line I	1	Y	
11	16525-115H00-0000	P115H00165250000	铝箔隔热波纹管II	Alu. foil Insulated Bellow II	1		
12	16523-116000-0000	P116000165230000	燃油管三通	Fuel Tee Pipe	1		
13	16513-338001-0000	P338001165130000	高压燃油管V（L=165mm）	High Pressure Fuel Line V（L=165mm）	1	Y	
14	16524-202101-0000	P202101165240000	铝箔隔热波纹管I	Alu. foil Insulated Bellow I	1		
15	44459-315001-0000	P315001444590000	液压油管固定夹I	Hydraulic Oil Securing Clip I	1		
16	GB/T16674-M6×16	BGB16674-M6×16	六角法兰面螺栓M6×16	Bolt Hexagon Flange Head M6×16	1		
17	16535-116000-0000	P116000165350000	燃油过滤器	Fuel Filter	1	Y	
18	51582-315001-0000	P315001515820000	燃油箱压板	Fuel Tank Pressing Plate	2		
19	GB/T16674-M8×25	BGB16674-M8×25	六角法兰面螺栓M8×25	Bolt Hexagon Flange Head M8×25	2		
20	16601-115K00-0000	P115K00166010000	EPA橡胶管φ7×φ11×700	EPA Rubber Hose φ7×φ11×700	1		
21	90710-J00000-0300	PJ00000907100300	弹性抱箍D	Elastic Clamp D	1		
22	81154-115000-0000	P115000811540000	油箱压板缓冲胶	Fuel Tank Pressing Plate Buffer Rubber	2		

九、前悬架 Front Supension

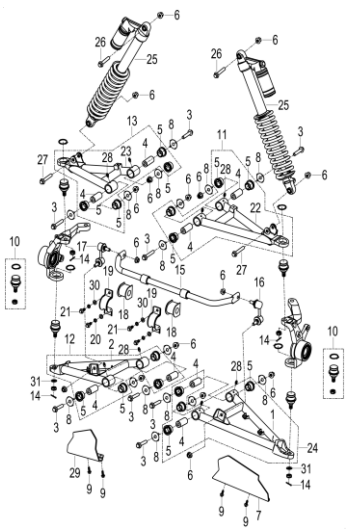

序号N	零部件图号 PartNo.	存货编码	零部件名称及规格	Description	数量Q		备注 REMARK
1	52350-338001-0000	P338001523500000	前下左摇架焊接组合	Front Lower Left A-Arm Weld Assy	1		
2	52450-338001-0000	P338001524500000	前下右摇架焊接组合	Front Lower Right A-Arm Weld Assy	1		
3	GB/T16674-M10×1.25×80	BGB16674-M10×1.25×80	六角法兰面螺栓M10×1.25×80	Bolt Hexagon Flange Head M10×1.25-80	8		
4	92900-J00000-9400	PJ00000929009400	圆柱衬套φ10.3×φ23×49.4	Cylindrical Bushing φ10.3×φ23×49.4	8		
5	92500-J00000-0201	PJ00000925000201	摇架翻边衬套φ23×φ28	Fanged Bushingφ23×φ28	16		
6	GB/T6183.2-M10×1.25	BGB6183.2-M10×1.25	非金属嵌件六角法兰面锁紧螺母M10×1.25	Nut Lock M10×1.25	16		
7	51564-311001-0301	P311001515640301	摇架护板	A-Arm Shield	1		
8	52117-115000-0000	P115000521170000	摇臂防尘支架 I	A-Arm Dust Bracket I	16		
9	GB/T16674-M6×16	BGB16674-M6×16	六角法兰面螺栓M6×16	Bolt Hexagon Flange Head M6×16	4		
10	5250A-J00000-0402	PJ000005250A0402	羊角球头销部件I	Knuckle Ball Stud I	4		
11	52300-338001-0000	P338001523000000	前左上摇架部件	Front Upper Left A-Arm	1		
12	52450-338001-0001	P338001524500001	前右下摇架部件	Front Lower Right A-Arm	1		
13	52400-338001-0000	P338001524000000	前右上摇架部件	Front Upper Right A-Arm	1		
14	GB/T91-2.5×30	BGB91-2.5×30	开口销2.5×30	Pin 2.5×30	4		
15	5274A-318001-0001	P3180015274A0001	前平衡杆焊接组合	Front Swaybar Tie Rod Weld Assy	1		
16	55744-315001-0000	P315001557440000	左平衡杆球头销	Left Swaybar Rod Ball Stud	1		
17	55745-315001-0000	P315001557450000	右平衡杆球头销	Right Swaybar Rod Ball Stud	1		
18	93140-J00000-0100	PJ00000931400100	平衡杆减震套	Swaybar Damping Sleeve	2	Y	
19	51590-318001-0000	P318001515900000	缓冲胶固定盖	Buffer Rubber Cover	2		
20	GB/T93-10	BGB93-10	弹垫10	Spring Washer 10	4		
21	GB/T16674-M10×1.25×25	BGB16674-M10×1.25×25	六角法兰面螺栓M10×1.25×25	Bolt Hexagon Flange Head M10×1.25×25	4		
22	5230A-338001-0000	P33800115230A0000	前上左摇架焊接组合	Front Upper Left A-Arm Weld Assy	1		
23	5240A-338001-0000	P3380015240A0000	前上右摇架焊接组合	Front Upper Right A-Arm Weld Assy	1		
24	52350-338001-0001	P338001523500001	前左下摇架部件	Front Lower Left A-Arm	1		
25	52100-J00000-4701	PJ00000521004701	前减震器部件	Front Shock Absorber Assy	2	Y	
26	GB/T16674-M10×1.25×55	BGB16674-M10×1.25×55	六角法兰面螺栓M10×1.25×55	Bolt Hexagon Flange Head M10×1.25×55	2		
27	GB/T16674-M10×1.25×60	BGB16674-M10×1.25×60	六角法兰面螺栓M10×1.25×60	Bolt Hexagon Flange Head M10×1.25×60	2		
28	52108-115000-0000	P115000521080000	摇臂油嘴	A-Arm Nozzle	8		
29	51565-311001-0301	P311001515650301	摇架护板	A-Arm Shield	1		

九、前悬架 Front Supension

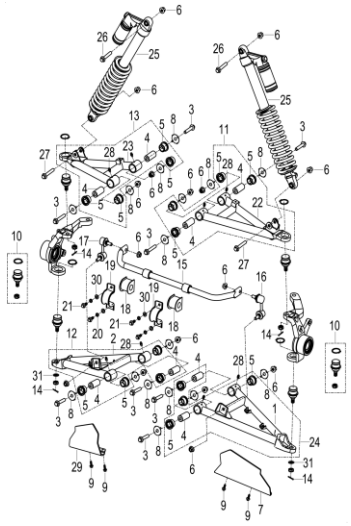

序号N	零部件图号 PartNo.	存货编码	零部件名称及规格	Description	数量Q		备注 REMARK
30	GB/T97.1-10	BGB97.1-10	平垫10	Plain Washer 10	4		
31	90605-J00000-0800	PJ00000906050800	平垫φ12.5×24×2	Plain Washer φ12.5×24×2	2		

十、后悬架 Rear Supension

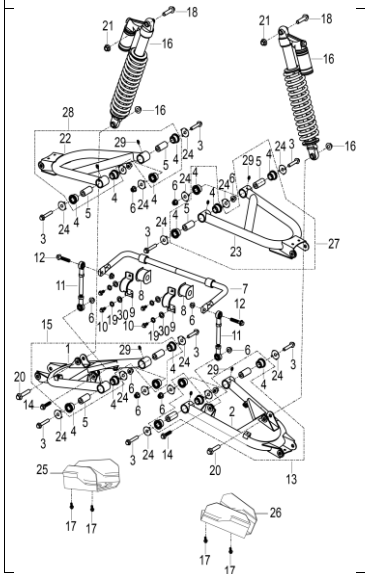

序号N	零部件图号 PartNo.	存货编码	零部件名称及规格	Description	数量Q		备注 REMARK
1	5545A-338001-0000	P3380015545A0000	后下右摇架焊接组合	Rear Lower Right A-Arm Weld Assy	1		
2	5535A-338001-0000	P3380015535A0000	后下左摇架焊接组合	Rear Lower Left A-Arm Weld Assy	1		
3	GB/T16674-M10×1.25×80	BGB16674-M10×1.25×80	六角法兰面螺栓M10×1.25×80	Bolt Hexagon Flange Head M10×1.25-80	8		
4	92450-J00000-1100	PJ00000924501100	翻遍塑料衬套φ22.3×φ26-φ34	Plastic Fanged Bushing φ22.3×φ26-φ34	16		
5	92900-J00000-9400	PJ00000929009400	圆柱衬套φ10.3×φ23×49.4	Cylindrical Bushing φ10.3×φ23×49.4	8		
6	GB/T6183.2-M10×1.25	BGB6183.2-M10×1.25	非金属嵌件六角法兰面锁紧螺母M10×1.25	Nut Lock M10×1.25	12		
7	5574A-318001-0001	P3180015574A0001	后平衡杆焊接组合	Rear Swaybar Tie Rod Weld Assy	1		
8	93140-J00000-0100	PJ00000931400100	平衡杆减震套	Swaybar Damping Sleeve	2	Y	
9	51590-318001-0000	P3180015159000000	缓冲胶固定盖	Buffer Rubber Cover	2		
10	GB/T16674-M10×1.25×25	BGB16674-M10×1.25×25	六角法兰面螺栓M10×1.25×25	Bolt Hexagon Flange Head M10×1.25×25	4		
11	55750-309001-0000	P3090015575000000	后平衡杆拉杆组合	Rear Swaybar Tie Rod Assy	2		
12	GB/T16674-M10×1.25×50	BGB16674-M10×1.25×50	六角法兰面螺栓M10×1.25×50	Bolt Hexagon Flange Head M10×1.25-50	2		
13	55350-338001-0001	P3380015535A0000	后左下摇架部件	Rear Lower Left A-Arm	1		
14	GB/T16674-M10×1.25×45	BGB16674-M10×1.25×45	六角法兰面螺栓M10×1.25×45	Bolt Hexagon Flange Head M10×1.25-45	2		
15	55450-338001-0001	P3380015545000001	后右下摇架部件	Rear Lower Right A-Arm	1		
16	55100-J00000-4701	PJ00000551004701	后减震器部件	Rear Shock Absorber Assy	2	Y	
17	GB/T16674-M6×16	BGB16674-M6×16	六角法兰面螺栓M6×16	Bolt Hexagon Flange Head M6×16	4		
18	GB/T16674-M12×1.25×70	BGB16674-M12×1.25×70	六角法兰面螺栓M12×1.25×70	Bolt Hexagon Flange Head M10×1.25-70	2		
19	GB/T93-10	BGB93-10	弹垫10	Spring Washer 10	4		
20	GB/T16674-M12×1.25×65	BGB16674-M12×1.25×65	六角法兰面螺栓M12×1.25×65	Bolt Hexagon Flange Head M10×1.25-65	2		
21	GB/T6183.2-M12×1.25	BGB6183.2-M12×1.25	非金属嵌件六角法兰面锁紧螺母M12×1.25	Nut Lock M12×1.25	4		
22	55400-338001-0000	P3380015540000000	后上右摇架焊接组合	Rear Upper Right A-Arm Weld Assy	1		
23	55300-338001-0000	P3380015530000000	后上左摇架焊接组合	Rear Upper Left A-Arm Weld Assy	1		
24	52117-115000-0000	P1150005211700000	摇臂防尘支架 I	A-Arm Dust Bracket I	16		
25	51951-315001-0000	P3150015195100000	摇架护板Ⅳ	A-Arm Shield	1		
26	51565-315001-0000	P3150015156500000	摇架护板 II	A-Arm Shield	1		
27	55300-338001-0001	P3380015530000001	后左上摇架部件	Rear Upper Left A-Arm	1		
28	55400-338001-0001	P3380015540000001	后右上摇架部件	Rear Upper Right A-Arm	1		
29	52108-115000-0000	P1150005210800000	摇臂油嘴	A-Arm Nozzle	8		
30	GB/T97.1-10	BGB97.1-10	平垫10	Plain Washer 10	4		

十一、前轮半轴 Front CV Shaft

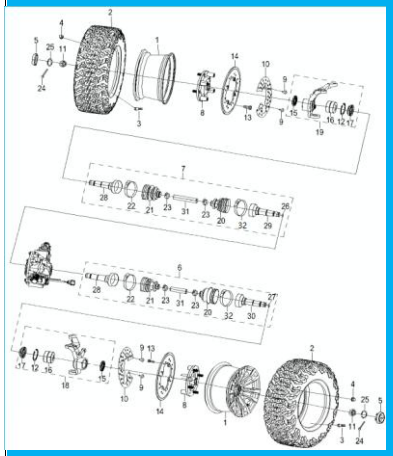

序号N	零部件图号 PartNo.	存货编码	零部件名称及规格	Description	数量 Q'TY
1	41122-J00000-4500	PJ00000411224600	前轮毂组合	Front Wheel for X550	2
	41122-J00000-4600	PJ00000411224700	前轮毂组合	Front Wheel for X550	
2	41121-J00000-8200	PJ00000411218200	前轮胎	Front Tyre	2
3	4113A-115000-0000	P1150004113A0000	阀芯组合	Valve Core	2
4	90345-J00000-0200	PJ00000903450200	轮毂盖型螺母M10×1.25-H	Taper Nut M10×1.25-H	8
5	41004-338001-0000	41004-338001-0000M	前轮毂装饰盖	Front Wheel Cap	4
6	26100-J00000-3700	PJ00000261003700	前左半轴部件	Front Left CV shaft assembly	1
7	26200-J00000-3500	PJ00000262003500	前右半轴部件	Front Right CV shaft assembly	1
8	41008-338001-0000	P338001410080000	前轮毂安装座 4-PCD156	Front Wheel Hub Mounting Seat 4-PCD156	2
9	90520-J00000-0400	PJ00000905200400	十字槽大盘头螺钉M6×12	Cross Recessed Plate Head Screw M6×12	4
10	51561-318001-0000	P318001515610000	前制动盘护罩	Front Disc Brake Shield	2
11	GB/T9459-M24×1.5-C	BGB9459-M24×1.5-C	六角开槽薄螺母M24×1.5	Nut Slotted M24×1.5	2
12	GB/T893.1-d0=60	BGB893.1-d0=60	孔用弹性挡圈d0=60	Clip D0=60	2
13	90220-J00000-0000	PJ00000902200000	带盘内六角锥面台阶螺栓M8	Shoulder Bolt Cone Inside Hexagonal M8	8
14	44453-315001-0000	P315001444530000	前碟刹片	Disc Brake(Front)	2
15	91147-315001-0000	P315001911470000	前羊角外侧油封φ42×φ55×7	Front Knuckle Oil Seal Outward φ42×φ55×7	2
16	52106-315001-0000	P315001521060000	双列圆锥轴承DU3006037	Bearing DU3006037	2
17	91123-311001-0000	P311001911230000	前羊角内侧油封φ38×φ60×7	Front Knuckle Oil Seal Inside φ38×φ60×7	2
18	52710-315001-0001	P315001527100001	前左羊角部件	Steering Knuckle Front Left Assembly	1
19	52720-315001-0001	P315001527200001	前右羊角部件	Steering Knuckle Front Right Assembly	1
20	26002-J00000-0100	PJ00000260020100	球笼护套B	Retainer Ball Cage Sheath B	2
21	26002-J00000-0200	PJ00000260020200	球笼护套C	Retainer Ball Cage Sheath C	2
22	26500-J00000-0900	PJ00000265000900	球笼护套抱箍K		2
23	26500-J00000-2300	PJ00000265002300	球笼护套抱箍Z		4
24	GB/T91-3.2×50	BGB91-3.2×50	开口销3.2×50	Pin Cotter 3.2×50	2
25	96400-J00000-1900	PJ00000964001900	轮毂装饰罩卡簧	Wheel Cap Circlip	4
26	91002100003	91002100003	轴用钢丝弹性挡圈DC22514	CirclipDC22514	1
27	91002100004	91002100004	轴用钢丝弹性挡圈DC19014	CirclipDC19014	1
28	262AA-J00000-3500	PJ00000262AA3500	前固定万向节	Front Fixed U-joint	2
29	262AB-J00000-3500	PJ00000262AB3500	后右移动万向节	Rear Movable U-joint（R）	1

十一、前轮半轴 Front CV Shaft

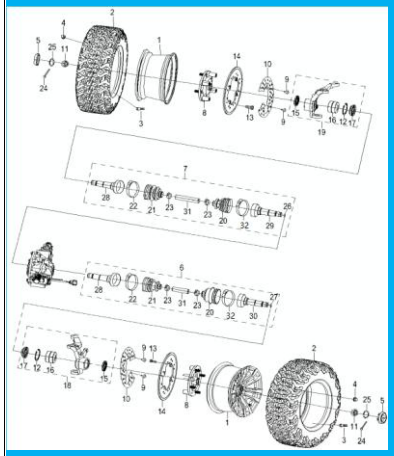

序号	零部件图号 Part No.	存货编码	零部件名称及规格	Description	数量 QTY
30	262AC-J00000-3500	PJ0000262AC3500	后左移动万向节	Rear Movable U-joint（L）	1
31	262AD-J00000-3500	PJ0000262AD3500	前半轴中间轴	Middle Shaft, Front CV Shaft Assy	2
32	26500-J00000-0800	PJ0000265000800	球笼护套抱箍J		2

十二、后轮半轴 Rear CV Shaft

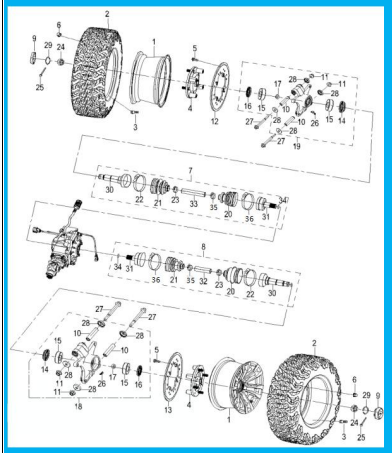

序号No	零部件图号 PartNo	存货编码	零部件名称及规格	Description	数量QT
1	41162-J00000-4500	PJ000004116246O0	后轮毂组合	Rear Wheel for X550	2
	41162-J00000-4600	PJ000004116247O0	后轮毂组合	Rear Wheel for X550	
2	41161-J00000-8200	PJ000004116182O0	后轮胎	Rear Tyre	2
3	4113A-115000-0000	P1150004113A0000	阀芯组合	Valve Core	2
4	41009-338001-0000	P338001410090000	后轮毂安装座4-PCD156	Rear Wheel Hub Mounting Seat4-PCD156	2
5	90220-J00000-0000	PJ000009022000O0	带盘内六角锥面台阶螺栓M8	Shoulder Bolt Cone Inside Hexagonal M8	8
6	90345-J00000-0200	PJ000009034502O0	轮毂盖型螺母M10×1.25-H	Taper Nut M10×1.25-H	8
7	26300-J00000-4100	PJ000002630041O0	后左半轴部件	Rear Left CV shaft assembly	1
8	26400-J00000-4200	PJ000002640042O0	后右半轴部件	Rear Right CV shaft assembly	1
9	41004-338001-0000	P338001410040000M	前轮毂装饰盖	Front Wheel Cap	2
10	55702-115000-0000	P115000557020000	羊角轴套衬管	Knuckle Bearing Sleeve Line	4
11	GB/T6183.2-M12×1.25	BGB6183.2-M12×1.25	非金属嵌件六角法兰面锁紧螺母M12×1.25	Nut Lock M12×1.25	4
12	44455-117000-0000	P117000444550000	右后碟刹片	Disc Brake-Rear Right	1
13	44454-117000-0000	P117000444540000	左后碟刹片	Disc Brake-Rear Left	1
14	91120-115000-0000	P115000911200000	后羊角内油封φ38×φ62×8	Rear Knuckle Oil Seal Inside φ38×φ62×8	2
15	GB/T276-6206-2RS	BGBT276-6206-2RS	深沟球轴承6206-2RS	Deep-groove Ball Bearing 6206-2RS	4
16	91121-115000-0000	P115000911210000	后羊角外油封φ42×φ62×7	Rear Knuckle Oil Seal Outward φ42×φ62×7	2
17	55704-115000-0000	P115000557040000	后羊角轴承内隔套	Rear Steering Knuckle Tube	2
18	55720-318001-0000	P318001557200000	后右羊角部件	Rear Right Knuckle	1
19	55710-318001-0000	P318001557100000	后左羊角部件	Rear Left Knuckle	1
20	26002-J00000-0400	PJ000002600204O0	球笼护套E	Retainer Ball Cage Sheath E	2
21	26002-J00000-0200	PJ000002600202O0	球笼护套C	Retainer Ball Cage Sheath C	2
22	26500-J00000-0600	PJ000002650006O0	球笼护套抱箍G		2
23	26500-J00000-0700	PJ000002650007O0	球笼护套抱箍H		2
24	GB/T9459-M24×1.5-C	BGB9459-M24×1.5-C	六角开槽薄螺母M24×1.5	Nut Slotted M24×1.5	2
25	GB/T91-3.2×50	BGB91-3.2×50	开口销3.2×50	Pin Cotter 3.2×50	2
26	52107-115000-0000	P115000521070000	羊角油嘴	Knuckle Oil Fitting	4
27	GB/T16674-M12×1.25×110	BGB16674-M12×1.25×110	六角法兰面螺栓M12×1.25×110	Bolt Hexagon Flange Head M10×1.25-110	4
28	55701-115000-0000	P115000557010000	羊角防尘盖	Knuckle Dust Cap	8
29	96400-J00000-1900	PJ000009640019O0	轮毂装饰罩卡簧	Wheel Cap Circlip	2

十二、后轮半轴 Rear CV Shaft

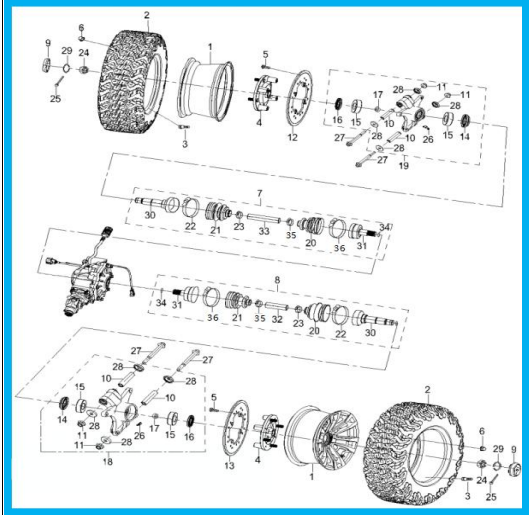

序号	零部件图号 PartNo	存货编码	零部件名称及规格	Description	数量 QT
30	264AA-J00000-4200	PJ00000264AA4200	后固定万向节	Rear Fixed U-joint	2
31	264AB-J00000-4200	PJ00000264AB4200	后移动万向节	Rear Movable U-joint	2
32	264AC-J00000-4200	PJ00000264AC4200	后右半轴中间轴	Middle Shaft, Rear Right CV Shaft Assy	1
33	264AD-J00000-4200	PJ00000264AD4200	后左半轴中间轴	Middle Shaft, Rear Left CV Shaft Assy	1
34	91002100005	91002100005	弹性挡圈DC30018	CirclipDC30018	2
35	26500-J00000-1800	PJ00000265001800	球笼护套抱箍U		2
36	26500-J00000-0800	PJ00000265000800	球笼护套抱箍J		2

十三、转向（一键启动、助力） HS404-4 Steering System (push-start, EPS)

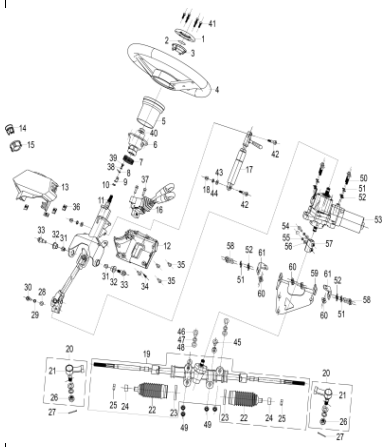

序号N	零部件图号 PartNo.	存货编码	零部件名称及规格	Description	数量Q		备注 REMARK
1	61120-311001-0000	P311001611200000	方向盘固定盖	Steering Wheel Cap	1		
2	03048-338001-0000	P338001030480000	方向盘水晶标	Steering Wheel Label	1		
3	34618-311001-0000	P311001346180000	喇叭开关	Horn Switch	1	Y	
4	61100-321001-0000	P321001611000000	方向盘部件	Steering Wheel Assy	1		
5	82305-311001-0000	P311001823050000	方向柱罩 I	Steering Colum CoverI	1		
6	61130-311001-0000	P311001611300000	方向盘连接套	Steering Wheel Connecting Sleeve	1		
7	34617-311001-0000	P311001346170000	喇叭弹簧	Horn Spring	1		
8	34613-311001-0000	P311001346130000	喇叭接地线	Horn Wire Ground	1		
9	34615-311001-0000	P311001346150000	喇叭连接片	Horn Connecting Pad	1		
10	34611-311001-0000	P311001346110000	喇叭绝缘垫片1	Horn Insulation Pad	1		
11	62110-333007-0000	P333007621100000	方向柱组合	Steering Colum Assy	1		
12	82306-338001-0000	P338001823060000	方向柱罩II	Cover Steering Colum II	1		
13	82307-338001-0000	P338001823070000	方向柱罩III	Cover Steering Colum III	1		
14	38640-B1-00	B13864000	一键启动开关	Push-start Switch	1		
15	82525-B1-00	B18252500	点火开关罩	Ignition Switch Cover	1		
16	37111-333006-0000	P333006371110000	拨杆开关	Shifter Switch	1		
17	61230-309001-0102	P309001612300102	方向气弹簧组合	Steering Rack Gas Spring	1		
18	GB/T6187-M6	BGB6187-M6	金属嵌件六角法兰面锁紧螺母M6	Lock Nut M6	2		
19	64100-315001-0000	P315001641000000	方向机部件	Steering Rack Assy	1		
20	64200-311001-0000	P311001642000000	方向机球头部件	Ball Joint	2		
21	64210-311001-0000	P311001642100000	方向机球头组合	Ball Joint Assy	2		
22	64103-115000-0000	P115000641030000	防尘罩 I	Dust-free Cover I	2		
23	64106-115000-0000	P115000641060000	防尘罩卡箍	Dust-free Cover Clamp	2		
24	90710-J0000-0700	PJ00000907100700	弹性抱箍H	Spring Clamp	2		
25	GB/T6170-M14×1.5	BGB6170-M14×1.5	六角螺母M14×1.5	Hexgon Nut M14×1.5	2		
26	GB/T9459-M14×1.5	BGB9459-M14×1.5	六角开槽薄螺母M14×1.5	Castle Nut M14×1.5	2		
27	GB/T91-2×30	BGB91-2×30	开口销2×30	Cotter Pin 2×30	2		
28	GB/T97.1-8	BGB97.1-8	平垫8	Plain Washer 8	2		
29	GB/T93-8	BGB93-8	弹垫8	Spring Washer 8	2		
30	GB/T16674-M8×30	BGB16674-M8×30	六角法兰面螺栓M8×30	Bolt hexagon flange head M8×30	1		

十三、转向（一键启动、助力） HS404-4 Steering System (push-start, EPS)



序号N	零部件图号 PartNo.	存货编码	零部件名称及规格	Description	数量Q		备注 REMARK
31	GB/T6183.2-1-M8-1	BGB6183.2-1-M8-1	非金属嵌件六角面锁紧螺母M8	Non-metallic Insert Hex Lock Nut M8	2		
32	92450-J00000-0100	PJ00000924500100	翻边塑料衬套φ12×φ15.5	Flanging Plastic Bush φ12×φ15.5	2		
33	90210-J00000-0300	PJ00000902100300	带盘六角台阶螺栓M8×φ12×12×13	Hex Step Bolt with Flange M8×φ12×12×13	2		
34	BGB2670.3-ST4.2×13	GB/T2670.3-ST4.2×13	十字槽盘头自攻螺钉ST4.2×13	Screw Cross Head Self Drilling ST4.2×13	1		
35	GB/T818-M5×16-D	BGB818-M5×16-D	十字槽盘头螺钉M5×16	Cross Recessed Screw M5×16	4		
36	90350-J00000-0100	PJ00000903500100	螺母夹M5	Nut Clip M5	4		
37	GB/T70.1-M6×16	BGB70.1-M6×16	内六角圆柱头螺钉M6×16	Hexagon Socket Head Screw M6×16	2		
38	34612-311001-0000	P311001346120000	喇叭绝缘垫片2	Insulation Horn Washer 2	1		
39	GB/T818-M4×10	BGB818-M4×10	十字槽盘头螺钉M4×10	Cross Recessed Screw M4×10	1		
40	GB/T6183.2-M12×1.25	BGB6183.2-M12×1.25	非金属嵌件六角法兰面锁紧螺母M12×1.25	Nut Lock M12×1.25	1		
41	GB/T70.1-M5×20	BGB70.1-M5×20	内六角圆柱头螺钉M5×20	Hexagon Socket Head Screw M5×20	6		
42	90204-B1-00	B19020400	内六角台阶螺栓M6×13-φ8×15	Inner Hex Step Bolt M6×13-φ8×15	2		
43	BGB93-6	BGB93-6	弹垫6	Spring Washer 6	2		
44	BGB97.1-6	BGB97.1-6	平垫φ6.4Xφ12X1.6	Plain Washer φ6.4Xφ12X1.6	2		
45	GB\T5787-M10×1.25×40	BGB5787-M10×1.25×40	六角法兰面螺栓M10×1.25×40	Bolt Hexagon Flange Head M10×1.25×40	1		
46	GB\T5787-M10×1.25×45	BGB5787-M10×1.25×45	六角法兰面螺栓M10×1.25×45	Bolt Hexagon Flange Head M10×1.25-45	3		
47	GB\T93-10	BGB93-10	弹垫10	Spring Washer 10	4		
48	GB\T97.1-10	BGB97.1-10	平垫10	Plain Washer 10	4		
49	GB/T 6183.2-M10×1.25	BGB6183.2-M10×1.25	非金属嵌件六角法兰面锁紧螺母M10×1.25	Nut Lock M10×1.25	4		
50	GB/T16674-M8×40	BGB16674-M8×40	六角法兰面螺栓M8×40	Hexagon Flange Bolt M8×40 for HS404-4	4		
51	GB/T93-8	BGB93-8	弹垫8	Spring Washer 8	8		
52	GB/T97.1-8	BGB97.1-8	平垫8	Plain Washer 8	8		
53	62200-318001-0000	P318001622000000	助力转向部件	EPS for HS404-4	1	Y	
54	GB/T16674-M6×30	BGB16674-M6×30	六角法兰面螺栓M6×30	Bolt Hexagon Flange Head M6×30 for HS404-4	2		
55	BGB93-6	BGB93-6	弹垫6	Spring Washer 6	2		
56	BGB97.1-6	BGB97.1-6	平垫6	Washer Plat 6	2		
57	62140-311001-0000	P311001621400000	助力转向连接套	EPS Adapter Sleeve for HS404-4	1		
58	GB/T16674-M8×25	BGB16674-M8×25	六角法兰面螺栓M8×25	Bolt Hexagon Flange Head M8×25	4		
59	51769-309001-0000	P309001517690000	助力转向安装板 II	EPS Mounting Plate II for HS404-4	1		
60	GB/T6187-M8	BGB6187-M8	金属嵌件六角法兰面锁紧螺母M8	Lock Nut M8 for HS404-4	8		
61	51768-311001-0000	P311001517680000	助力转向安装板 I	EPS Mounting Plate I for HS404-4	2		

十三 、转向（钥匙启动、助力）Steering system (key start, EPS)



序号N	零部件图号 PartNo.	存货编码	零部件名称及规格	Description	数量Q		备注 REMARK
1	61120-311001-0000	P311001611200000	方向盘固定盖	Steering Wheel Cap	1		
2	03048-338001-0000	P338001030480000	方向盘水晶标	Steering Wheel Label	1		
3	34618-311001-0000	P311001346180000	喇叭开关	Horn Switch	1	Y	
4	61100-321001-0000	P321001611000000	方向盘部件	Steering Wheel Assy	1		
5	82305-311001-0000	P311001823050000	方向柱罩 I	Steering Colum CoverI	1		
6	61130-311001-0000	P311001611300000	方向盘连接套	Steering Wheel Connecting Sleeve	1		
7	34617-311001-0000	P311001346170000	喇叭弹簧	Horn Spring	1		
8	34613-311001-0000	P311001346130000	喇叭接地线	Horn Wire Ground	1		
9	34615-311001-0000	P311001346150000	喇叭连接片	Horn Connecting Pad	1		
10	34611-311001-0000	P311001346110000	喇叭绝缘垫片1	Horn Insulation Pad	1		
11	62110-333007-0000	P333007621100000	方向柱组合	Steering Colum Assy	1		
12	82306-338001-0000	P338001823060000	方向柱罩II	Cover Steering Colum II	1		
13	82307-338001-0000	P338001823070000	方向柱罩III	Cover Steering Colum III	1		
14	37200-338001-0001	P338001372000001	组合点火开关	Ignition Switch Assy	1	Y	线长240mm，新增铭牌
	37200-338001-0100	P338001372000100	组合点火开关	Ignition Switch Assy	1	Y	新增厂家（金旗）；2024.11.21
15	82525-338001-0000	P338001825250000	点火开关罩	Ignition Switch Cover	1		
16	37111-333006-0000	P333006371110000	拨杆开关	Shifter Switch	1		
17	61230-309001-0102	P309001612300102	方向气弹簧组合	Steering Rack Gas Spring	1	Y	
18	GB/T6187-M6	BGB6187-M6	金属嵌件六角法兰面锁紧螺母M6	Lock Nut M6	2		
19	64100-315001-0000	P315001641000000	方向机部件	Steering Rack Assy	1		
20	64200-311001-0000	P311001642000000	方向机球头部件	Ball Joint	2		
21	64210-311001-0000	P311001642100000	方向机球头组合	Ball Joint Assy	2		
22	64103-115000-0000	P115000641030000	防尘罩 I	Dust-free Cover I	2		
23	64106-115000-0000	P115000641060000	防尘罩卡箍	Dust-free Cover Clamp	2		
24	90710-J0000-0700	PJ00000907100700	弹性抱箍H	Spring Clamp	2		
25	GB/T6170-M14×1.5	BGB6170-M14×1.5	六角螺母M14×1.5	Hexgon Nut M14×1.5	2		
26	GB/T9459-M14×1.5	BGB9459-M14×1.5	六角开槽薄螺母M14×1.5	Castle Nut M14×1.5	2		
27	GB/T91-2×30	BGB91-2×30	开口销2×30	Cotter Pin 2×30	2	Y	
28	GB/T97.1-8	BGB97.1-8	平垫8	Plain Washer 8	2		
29	GB/T93-8	BGB93-8	弹垫8	Spring Washer 8	2		
30	GB/T16674-M8×30	BGB16674-M8×30	六角法兰面螺栓M8×30	Bolt hexagon flange head M8×30	1		

十三、转向（钥匙启动、助力）Steering system (key start, EPS)



序号N	零部件图号 PartNo.	存货编码	零部件名称及规格	Description	数量Q		备注 REMARK
31	GB/T6183.2-1-M8-1	BGB6183.2-1-M8-1	非金属嵌件六角面锁紧螺母M8	Non-metallic Insert Hex Lock Nut M8	2		
32	92450-J00000-0100	PJ00000924500100	翻边塑料衬套φ12×φ15.5	Flanging Plastic Bush φ12×φ15.5	2		
33	90210-J00000-0300	PJ00000902100300	带盘六角台阶螺栓M8×φ12×12×13	Hex Step Bolt with Flange M8×φ12×12×13	2		
34	BGB2670.3-ST4.2×13	GB/T2670.3-ST4.2×13	十字槽盘头自攻螺钉ST4.2×13	Screw Cross Head Self Drilling ST4.2×13	1		
35	GB/T818-M5×16-D	BGB818-M5×16-D	十字槽盘头螺钉M5×16	Cross Recessed Screw M5×16	4		
36	90350-J00000-0100	PJ00000903500100	螺母夹M5	Nut Clip M5	4		
37	GB/T70.1-M6×16	BGB70.1-M6×16	内六角圆柱头螺钉M6×16	Hexagon Socket Head Screw M6×16	2		
38	34612-311001-0000	P311001346120000	喇叭绝缘垫片2	Insulation Horn Washer 2	1		
39	GB/T818-M4×10	BGB818-M4×10	十字槽盘头螺钉M4×10	Cross Recessed Screw M4×10	1		
40	GB/T6183.2-M12×1.25	BGB6183.2-M12×1.25	非金属嵌件六角法兰面锁紧螺母M12×1.25	Nut Lock M12×1.25	1		
41	GB/T70.1-M5×20	BGB70.1-M5×20	内六角圆柱头螺钉M5×20	Hexagon Socket Head Screw M5×20	6		
42	90204-B1-00	B19020400	内六角台阶螺栓M6×13-φ8×15	Inner Hex Step Bolt M6×13-φ8×15	2		
43	BGB93-6	BGB93-6	弹垫6	Spring Washer 6	2		
44	BGB97.1-6	BGB97.1-6	平垫φ6.4Xφ12X1.6	Plain Washer φ6.4Xφ12X1.6	2		
45	GB\T5787-M10×1.25×40	BGB5787-M10×1.25×40	六角法兰面螺栓M10×1.25×40	Bolt Hexagon Flange Head M10×1.25×40	1		
46	GB\T5787-M10×1.25×45	BGB5787-M10×1.25×45	六角法兰面螺栓M10×1.25×45	Bolt Hexagon Flange Head M10×1.25-45	3		
47	GB\T93-10	BGB93-10	弹垫10	Spring Washer 10	4		
48	GB\T97.1-10	BGB97.1-10	平垫10	Plain Washer 10	4		
49	GB/T 6183.2-M10×1.25	BGB6183.2-M10×1.25	非金属嵌件六角法兰面锁紧螺母M10×1.25	Nut Lock M10×1.25	4		
50	GB/T16674-M8×40	BGB16674-M8×40	六角法兰面螺栓M8×40	Hexagon Flange Bolt M8×40 for HS404-4	4		
51	GB/T93-8	BGB93-8	弹垫8	Spring Washer 8	8		
52	GB/T97.1-8	BGB97.1-8	平垫8	Plain Washer 8	8		
53	62200-318001-0000	P318001622000000	助力转向部件	EPS for HS404-4	1	Y	
54	GB/T16674-M6×30	BGB16674-M6×30	六角法兰面螺栓M6×30	Bolt Hexagon Flange Head M6×30 for HS404-4	2		
55	BGB93-6	BGB93-6	弹垫6	Spring Washer 6	2		
56	BGB97.1-6	BGB97.1-6	平垫6	Washer Plat 6	2		
57	62140-311001-0000	P311001621400000	助力转向连接套	EPS Adapter Sleeve for HS404-4	1		
58	GB/T16674-M8×25	BGB16674-M8×25	六角法兰面螺栓M8×25	Bolt Hexagon Flange Head M8×25	4		
59	51769-309001-0000	P309001517690000	助力转向安装板 II	EPS Mounting Plate II for HS404-4	1		
60	GB/T6187-M8	BGB6187-M8	金属嵌件六角法兰面锁紧螺母M8	Lock Nut M8 for HS404-4	8		
61	51768-311001-0000	P311001517680000	助力转向安装板 I	EPS Mounting Plate I for HS404-4	2		

十四、碟刹 Disc Brake System

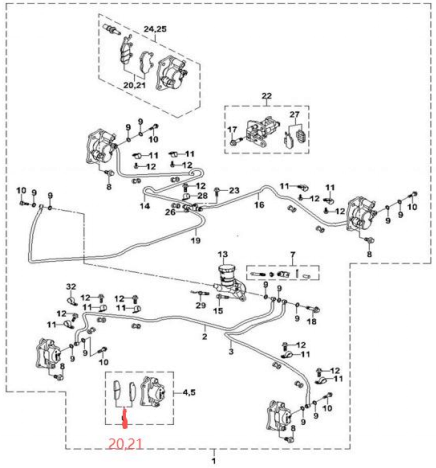

序号N	零部件图号 PartNo.	存货编码	零部件名称及规格	Description	数量Q		备注 REMARK
1	44100-333006-0000	P333006441000000	液压制动分组合 I	Hydraulic Brake Assy I	1		
2	44140-315001-0000	P315001441400000	右前液压油管	Right Front Hydraulic Oil Pipe	1		
3	44130-315001-0000	P315001441300000	左前液压油管	Left Front Hydraulic Oil Pipe	1		
4	44120-315001-0000	P315001441200000	前右碟刹钳组合	Front Right Brake Caliper Assy	1		
5	44110-315001-0000	P315001441100000	前左碟刹钳组合	Front Left Brake Caliper Assy	1		
6	~~44112-117000-0000~~	~~P117000441120000~~	~~前制动片组合~~	~~Front Brake Shoe Combination~~	~~2~~		
	~~44111-115000-0000~~	~~P115000441110000~~	~~前左制动片组合~~	~~Front Left Brake Pad~~	~~1~~	~~Y~~	
7	44014-338001-0001	P338001441040001	碟刹顶杆组合	Brake Top Lever Assy	1		
8	GB/T16674-M10×1.25×22	BGB16674-M10×1.25×22	六角法兰面螺栓M10×1.25×22	Hexagon Bolt M10×1.25×22	8		
9	44002-115000-0000	P115000440020000	液压油管垫片	Hydraulic Oil Pipe Gascket	13		
10	44001-115000-0000	P115000440010000	液压油管螺栓 I	Hydraulic Oil Pipe Bolt I	5		
11	44459-115000-0000	P115000444590000	液压油管固定夹 I	Hydraulic Oil Securing Clip I	8		
12	GB/T16674-M6×16	BGB16674-M6×16	六角法兰面螺栓M6×16	Bolt Hexagon Flange Head M6×16	10		
13	44180-315001-0000	P315001441800000	主泵组合	Main Pump Assy	1	Y	
14	44250-315001-0000	P315001442500000	右后液压油管	Right Rear Hydraulic Oil Pipe	1		
15	GB/T16674-M10×1.25×25	BGB16674-M10×1.25×25	六角法兰面螺栓M10×1.25×25	Bolt Hexagon Flange Head M10×1.25×25	2		
16	44240-315001-0000	P315001442400000	左后液压油管	Left rear Hydraulic Oil Pipe	1		
17	GB/T16674-M10×1.25×35	BGB16674-M10×1.25×35	六角法兰面螺栓M10×1.25×35	Hexagon Bolt M10×1.25×35	2		
18	44013-115000-0000	P115000440130000	液压油管螺栓 II	Hydraulic Oil Pipe Bolt II	1		
19	44230-309001-0000	P309001442300000	中间液压油管	Middle Hydraulic Oil Pipe	1		
20	~~44451-117000-0000~~	~~P117000444510000~~	~~左前碟刹片~~	~~Left Front Brake Shoe~~	~~1~~		
	~~44453-315001-0000~~	~~P315001444530000~~	~~前碟刹片~~	~~Front Brake Pad~~	~~1~~	~~Y~~	
	44111-115000-0000	P115000441110000	前左制动片组合	Front Left Brake Pad	1		上一项编码错误：2026.8.6改
21	~~44452-117000-0000~~	~~P117000444520000~~	~~右前碟刹片~~	~~Right Front Brake Shoe~~	~~1~~		
	~~44453-315001-0000~~	~~P315001444530000~~	~~前碟刹片~~	~~Front Brake Pad~~	~~1~~	~~Y~~	
	44121-115000-0000	P115000441210000	前右制动片组合	Right Front Brake Pad	1		上一项编码错误：2026.8.6改
22	~~44310-315001-0000~~	~~P315001443100000~~	~~液压驻车组合~~	~~Hydraulic Parking Assy~~	~~1~~		
	44320-315001-0000	P315001443200000	机械驻车组合	Hydraulic Parking Assy	1		重码：2025.5.7改
23	GB/T16674-M6×30	BGB16674-M6×30	六角法兰面螺栓M6×30	Bolt Hexagon Flange Head M6×30 for HS404-4	1		
24	44220-315001-0000	P315001442200000	后右碟刹钳组合	Rear Right Brake Caliper Assy	1		
25	44210-315001-0000	P315001442100000	后左碟刹钳组合	Rear Left Brake Caliper Assy	1		
26	44008-115000-0000	P115000440080000	液压油管三通	Hydraulic Oil T-pipe	2		
27	44321-315001-0000	P315001443210000	机械驻车制动片组合	Hydraulic Parking Pad Combination	1		
28	19023-115000-0000	P115000190230000	水管固定管夹V	Water Pipe Securing Clip V	3		
29	~~37620-312001-0000~~	~~P312001376200000~~	~~后制动灯开关~~	~~Rear Brake Switch~~	~~1~~	~~Y~~	
	37620-321001-0000	P321001376200000	后制动灯开关	Switch brake tail lamp			上一项编码错误：2025.11.20改
~~30~~	~~44121-115000-0000~~	~~P115000441210000~~	~~前右制动片组合~~	~~Right Front Brake Pad~~	~~1~~	~~Y~~	

十五 、换挡 Shift System

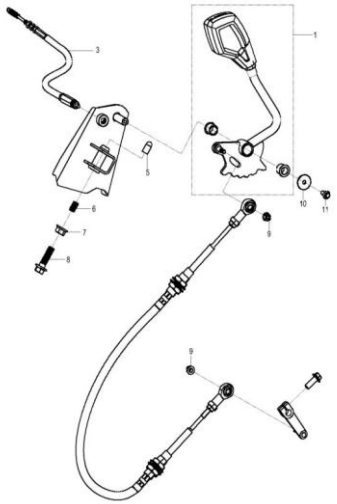

序号N	零部件图号 PartNo.	存货编码	零部件名称及规格	Description	数量Q		备注 REMARK
1	23416-338001-0000	P338001234160000	换档机构本体组合	Gearshift Assy	1		
2	2341A-J00000-1102	PJ000002341A1102	换挡拉索组合M	Gearshift Cable Assy M	1	Y	
3	6105A-J00000-1501	PJ000006105A1501	倒档限位拉索组合R	Reverse Limiting Cable Assy R	1	Y	
4	2332A-034000-0000	P0340002332A0000	变速臂组合	Shift Arm	1		
5	23475-304001-0000	P304001234750000	换档定位销φ10×13.3	Gearshift Positioning Pin φ10×13.3	1		
6	23302-002000-0000	P002000233020000	变速轴复位弹簧	Gearshift Shaft Return Spring	1		
7	BG/TB6177.1-M10×1.25	BGB6177.1-M10×1.25	六角法兰面螺母M10×1.25	Hexagon Flange Nut M10×1.25	1		
8	GB/T16674-M10×1.25×25	BGB16674-M10×1.25×25	六角法兰面螺栓M10×1.25×25	Bolt Hexagon Flange Head M10×1.25×25	1		
9	GB/T6183.2-M6	BGB6183.2-M6	非金属嵌件六角法兰面锁紧螺母M6	Non-metallic Insert Hex Flange Lock Nut M6	2		
10	90605-J00000-0200	PJ00000906050200	平垫φ6×φ25×2	Plain Washer φ6×φ25×2	1		
11	GB/T16674-M6×16	BGB16674-M6×16	六角法兰面螺栓M6×16	Bolt Hexagon Flange Head M6×16	1		

十六、驻车Parking System

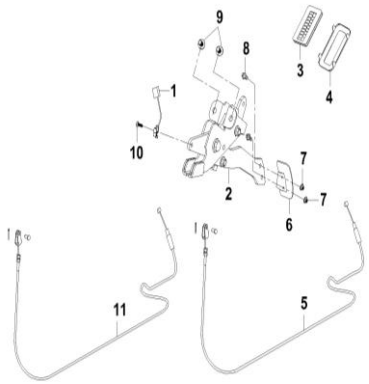

序号N	零部件图号 PartNo.	存货编码	零部件名称及规格	Description	数量Q		备注 REMARK
1	37310-311001-0011	P311001373100011	微动开关	Micro Switch	1	Y	
2	43320-338001-0000	P338001433200000	脚踏驻车组合	Parking Pedal Assy	1		
3	93200-J00000-0300	PJ00000932000300	驻车防尘垫D	Parking Pedal Dust Pad	1		
4	51528-309001-0000	P309001515280000	驻车装饰罩	Parking Cover	1		
5	4323A-J00000-2200	PJ000004323A2200	驻车制动拉索组合X	Parking Cable Assy X	1	Y	
6	43320-309001-0000	P309001433200000	驻车踏板组合	Parking Pedal Assy	1		
7	GB/T6177.1-M6	BGB6177.1-M6	六角法兰面螺母M6	Hexagon Flange Head Nut M6	2		
8	GB/T16674-M6×16	BGB16674-M6×16	六角法兰面螺栓M6×16	Bolt Hexagon Flange Head M6×16	2		
9	90348-J00000-0600	PJ00000903480600	六角法兰面螺栓、弹垫和平垫组合件M8×20	Hexagon Bolt,Spring Washer&Plain Washer Assy M8×20	2		
10	GB/T818-M4×10	BGB818-M4×10	十字槽盘头螺钉M4×10	Cross Recessed Screw M4×10	1		
11	~~4325A-J00000-0000~~	~~PJ000004325A0000~~	~~驻车解锁拉索组合A~~	~~Parking Release Cable Assy A~~	~~1~~		
	4325A-J00000-0001	PJ000004325A0001	驻车解锁拉索组合A	Parking Release Cable Assy A	1	Y	上一项为老状态 更换为新状态

十七、制动油门踏板 Brake System & Accelerator System

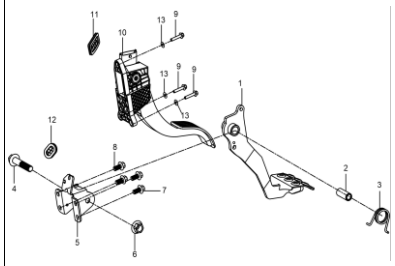

序号N	零部件图号 PartNo.	存货编码	零部件名称及规格	Description	数量Q		备注 REMARK
1	4311A-338001-0000	P3380014311A0000	制动踏板焊接组合	Brake Pedal Weld Assy	1		
2	92900-J00000-2700	PJ00000929002700	圆柱衬套φ10.2×φ15×35.5	Cylindrical Bushing φ10.2×φ15×35.5	1		
3	96300-J00000-3900	PJ00000963003900	扭簧AP	Torsion Spring AP	1		
4	GB/T16674-M10×1.25×60	BGB16674-M10×1.25×60	六角法兰面螺栓M10×1.25×60	Bolt Hexagon Flange Head M10×1.25×60	1		
5	51508-315001-0000	P315001515080000	制动踏板安装座	Brake Pedal Mounting Base	1		
6	GB/T6183.2-M10×1.25	BGB6183.2-M10×1.25	非金属嵌件六角法兰面锁紧螺母M10×1.25	Nut Lock M10×1.25	1		
7	GB/T16674-M8×20	BGB16674-M8×20	六角法兰面螺栓M8×20	Bolt Hexagon Flange Head M8×20	2		
8	GB/T16674-M8×25	BGB16674-M8×25	六角法兰面螺栓M8×25	Bolt Hexagon Flange Head M8×25	2		
9	GB/T16674-M6×25	BGB16674-M6×25	六角法兰面螺栓M6×25	Bolt Hexagon Flange Head M6×16	3		
10	379410-321001-0010	P321001379410010	电子油门踏板	Accelerator Pedel Module	1		
11	93215-J00000-0800	PJ00000932150800	油门踏板防尘垫 I	Accelerator Pedel Dust Pad I	1		
12	93215-J00000-0500	PJ00000932150500	制动踏板防尘垫F	Brake Pedel Dust Pad I	1		
13	GB/T96.1-6	BGB96.1-6	平垫6	Washer Plat 6	3		

十八、传动轴Transmission Shaft

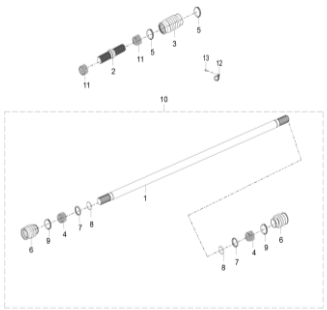

序号N	零部件图号 PartNo.	存货编码	零部件名称及规格	Description	数量Q		备注 REMARK
1	25211-338001-0000	P338001252110000	前传动轴	Front Drive Shaft	1		
2	25200-J00000-2400	PJ00000252002400	后传动轴	Rear Drive Shaft	1		
3	25102-J00000-1400	PJ00000251021400	传动轴防尘胶套Q	Driveshaft Dustproof Rubber Sleeve Q	1	Y	
4	25103-J00000-0100	PJ00000251030100	传动轴压簧B	Driveshaft Pressure Spring B	4		
5	25105-J00000-0000	PJ00000251050000	传动轴防尘套抱箍A	Driveshaft Dustproof Rubber Sleeve A	2	Y	
6	25102-J00000-0200	PJ00000251020200	传动轴防尘胶套C	Driveshaft Dustproof Rubber Sleeve C	2	Y	
7	25101-J00000-0000	PJ00000251010000	传动轴衬套A	Driveshaft Bushing A	2		
8	GB/T895.2-d0=25	BGB895.2-d0=25	轴用钢丝挡圈d0=25	Circlip for Shaft d0=25	2		
9	25105-J00000-0100	PJ00000251050100	传动轴防尘套抱箍B	Driveshaft Dustproof Clamp B	2	Y	
10	25210-338001-0000	P338001252100000	前传动轴组合	Front Drive Shaft Assy	1		
11	25103-J00000-0400	PJ00000251030400	传动轴压簧E	Driveshaft Pressure Spring E	2		
12	11006-004000-0000	P004000110060000	管夹Ⅰ	Clamp Ⅰ	1		
13	GB/T 5787-M6×16	BGB16674-M6×16	六角法兰面螺栓M6×16	Bolt Hexagon Flange Head M6×16	1		

十九、座垫组件 Seat Components

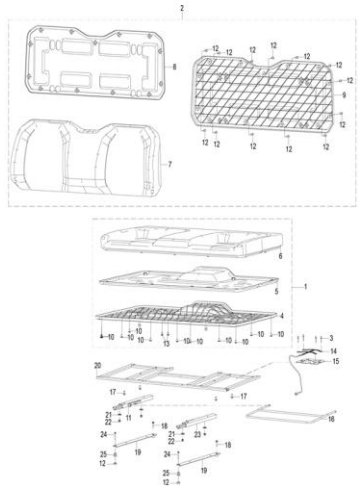

序号N	零部件图号 PartNo.	存货编码	零部件名称及规格	Description	数量O		备注 REMARK
1	71110-333006-0000	P333006711100000	座垫组合Ⅰ	Seat Kit for HS394-6	1		HS394-6
2	71210-321001-0000	P321001712100000	靠背组合	Seat Backrest for HS394-6	1		HS394-6
3	GB/T12618-4×10×12-B	BGB12618-4×10×12-B	开口型扁圆头抽芯铆钉4×10×12-B	Open Flat Head Blind Rivet 4×10×12-B	4		
4	71111-333006-0002	P333006711110002	座垫底板I	Seat Bottom Plate I	1		
5	71111-338001-0000	P338001711110000	座垫内衬板	Seat Bottom Plate I	1		
6	71224-338001-0000	P338001712240000	座垫泡沫组合	Seat Foam	1		
7	71226-321001-0000	P321001712260000	靠背泡沫组合	Seat Backrest Foam	1		
8	71215-321001-0000	P321001712150000	靠背内衬板	Seat Backrest Internal Plate	1		
9	71211-321001-0000	P321001712110000	靠背底板	Seat Backrest Bottom Plate	1		
10	GB/T16674-M6×30	BGB16674-M6×30	六角法兰面螺栓M6×30	Bolt Hexagon Flange Head M6×30	8		
11	71540-116000-0000	P116000715400000	导轨组合I	Slide Rail I	1		
12	92900-J00000-0900	PJ00000929000900	圆柱衬套φ7×φ20×10	Cylindrical Bushing φ7×φ20×10	2		
13	90520-J00000-0400	PJ00000905200400	十字槽大盘头螺钉M6×12	Cross Recessed Plate Head Screw M6×12	2		
14	36580-333006-0000	P333006365800000	座椅压力传感器	Seat pressure sensor	1		
15	515BV-333006-0000	P333006515BV0000	压力传感器支撑板	Pressure sensor support plate	1		
16	71535-333006-0000	P333006715350000	导轨调节杆	Connection Rod, Sliderail	1		
17	GB/T16674-M8×16	BGB16674-M8×16	六角法兰面螺栓M8×16	Bolt Hexagon Flange Head M8×16	4		
18	GB/T16674-M8×30	BGB16674-M8×30	六角法兰面螺栓M8×30	Bolt Hexagon Flange Head M8×30	2		
19	82605-333006-0000	P333006826050000	座垫安装板Ⅰ	Seat cushion mounting plate I	2		
20	71510-333006-0000	P333006715100000	座椅连接架组合Ⅰ	Seat Connection Braket Assy I	1		
21	GB/T5287-8	BGB5287-8	平垫8	Plain Washer 8	4		
22	GB/T6183.2-M8	BGB6183.2-M8	非金属嵌件六角法兰面锁紧螺母M8	Lock Nut M8	4		
23	71550-116000-0000	P116000715500000	导轨组合II	Slide Rail II	1		
24	GB/T16674-M6×40	BGB16674-M6×40	六角法兰面螺栓M6×40	Bolt Hexagon Flange Head M6×40	2		
25	82219-115000-0000	P115000822190000	前面板拉带支座	Front Panel Pull Belt Bearing	2		

二十、安全带

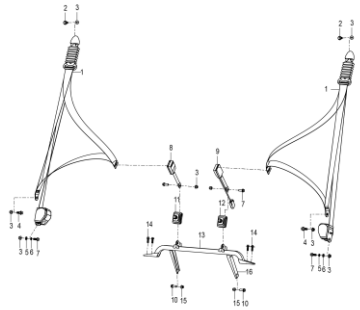

序号N	零部件图号 PartNo.	存货编码	零部件名称及规格	Description	数量Q		备注 REMARK
1	75110-312001-0000	P312001751100000	安全带组合	Seat Belt	2		
2	90210-J00000-0400	PJ00000902100400	带盘六角台阶螺栓M10×φ14×5×22	Bolt Hexagon Flange Head M10×φ14×5×22	2		
3	GB/T6183.2-M10×1.25	BGB6183.2-M10×1.25	非金属嵌件六角法兰面锁紧螺母M10×1.25	Nut Lock M10×1.25	8		
4	90210-J00000-0600	PJ00000902100600	带盘六角台阶螺栓M10×φ14×9×25	Bolt Hexagon Flange Head M10×φ14×9×25	2		
5	GB/T97.1-10	BGB97.1-10	平垫10	Plain Washer 10	2		
6	GB/T93-10	BGB93-10	弹垫10	Spring Washer 10	2		
7	GB/T16674-M10×1.25×25	BGB16674-M10×1.25×25	六角法兰面螺栓M10×1.25×25	Bolt Hexagon Flange Head M10×1.25×25	4		
8	75130-312001-0000	P312001751300000	安全带锁扣组合 II	Seat belt buckle assy II	1		
9	75120-312001-0000	P312001751200000	安全带锁扣组合 I	Seat belt buckle assy I	1		
10	GB/T16674-M8×16	BGB16674-M8×16	六角法兰面螺栓M8×16	Bolt Hexagon Flange Head M8×16	2		
11	93260-J00000-0100	PJ00000932600100	安全带座护套(右)	Seat belt seat boot (right)	1		
12	93260-J00000-0000	PJ00000932600000	安全带座护套(左)	Seat belt seat boot (left)	1		
~~13~~	~~51559-310101-0000~~	~~P310101515590000~~	~~安全带锁扣支架安装组合~~	~~Seat Belt Locking Bracket Mounting Assy~~	~~1~~		此件为借用， H技字【2025年】第 189 号通知取消：2025.5.9
14	90348-J00000-0100	PJ00000903480100	六角法兰面螺栓、弹垫和平垫组合件M8×25	Hexagon Bolt,Spring Washer&Plain Washer Assy M8×25	4		
15	GB/T 6183.2-M8	BGB6183.2-M8	**非金属嵌件六角法**兰面锁紧螺母M8		2		H技字【2025年】第 189 号：2025.5.9
16	51559-333006-0000	P3330065155900000	安全带锁扣固定支撑		1		改为专用，与原状态不能互换 H技字【2025年】第 189 号：2025.5.9

二十一、棚杆ROPS

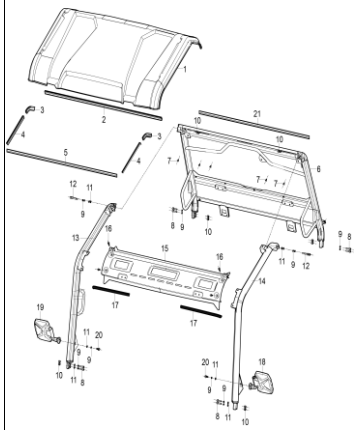

序号N	零部件图号 PartNo.	存货编码	零部件名称及规格	Description	数量Q		备注 REMARK
1	82518-338001-0000	P338001825180000	顶棚I	Roof I	1		
2	86804-338001-0200	P338001868040200	密封胶条C(L=1200mm)	Sealing Strip C(L=1200mm)	1	Y	
3	86804-338001-0400	P338001868040400	密封胶条C(L=140mm)	Sealing Strip C(L=140mm)	2	Y	
4	86804-338001-0500	P338001868040500	密封胶条C(L=355mm)	Sealing Strip C(L=355mm)	2	Y	
5	86804-338001-0600	P338001868040600	密封胶条C(L=1110mm)	Sealing Strip C(L=1110mm)	1	Y	
6	51730-333006-0000	P333006517300000	棚杆组合III	ROPS Assy III	1		
7	90520-J00000-0400	PJ00000905200400	十字槽大盘头螺钉M6×12	Cross Recessed Plate Head Screw M6×12	4		
8	GB/T70.1-M10×1.25×35	BGB70.1-M10×1.25×35	内六角圆柱头螺钉M10×1.25×35	Hexagon Socket Head Screw M10×1.25×35	8		
9	GB/T93-10	BGB93-10	弹垫10	Spring Washer 10	14		
10	GB/T889.1-M10×1.5	BGB889.2-M10×1.25	非金属嵌件六角锁紧螺母M10×1.25	Hexagon Socket Head Nut M10×1.25	12		
11	GB/T97.1-10	BGB97.1-10	平垫10	Plain Washer 10	10		
12	GB/T70.1-M10×1.25×50	BGB70.1-M10×1.25×50	内六角圆柱头螺钉M10×1.25×50	Hexagon Socket Head Screw M10×1.25×50	4		
13	51720-338001-0100	P338001517200100	棚杆组合II	ROPS Assy II	1		
14	51710-338001-0100	P338001517100100	棚杆组合I	ROPS Assy I	1		
15	82725-338001-0100	P338001827250100	棚杆前装饰板焊接组合	ROPS Front Weld Assy	1		
16	90348-J00000-0100	PJ00000903480100	六角法兰面螺栓、弹垫和平垫组合件M8×25	Hexagon Bolt,Spring Washer&Plain Washer Assy M8×25	4		
17	86803-338001-0000	P338001868030000	密封胶条B(L=400mm)	Sealing Strip B(L=400mm)	2	Y	
18	89210-333006-0000	P333006892100000	左后视镜部件	Left Rear Mirror	1	Y	
19	89220-333006-0000	P333006892200000	右后视镜部件	Right Rear Mirror	1	Y	
20	GB/T16674-M10×1.25×20	BGB16674-M10×1.25×20	六角法兰面螺栓M10×1.25×20	Hexagon Bolt M10×1.25×20	2		
21	86803-338001-0100	P338001868030100	密封胶条B(L=1225mm)	Sealing Strip B(L=1225mm)	1	Y	

二十二 、前保险杠、卷扬机Front Bumper & Winch

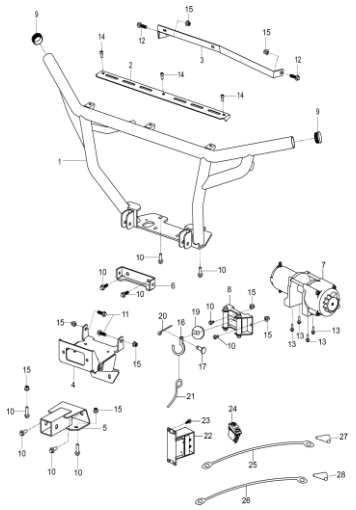

序号N	零部件图号 PartNo.	存货编码	零部件名称及规格	Description	数量Q		备注 REMARK
1	51304-338001-0000	P338001513040000	前保险杠焊接组合	Front Bumper Welding Assy	1		
2	51503-338001-0000	P338001515030000	灯具安装支架I	Lights Mounting Bracket	1		
3	51573-338001-0000	P338001515730000	前面板支架	Front Hood Bracket	1		
4	51509-338001-0000	P338001515090000	卷扬机安装板	Winch Mounting Bracket	1		
5	51920-338001-0000	P338001519200000	前拖挂接头D	Front Hitch Receiver D	1		
6	515AY-338001-0000	P338001515AY0000	前绞盘支架固定板	Front Winch Mounting Plate	1		
7	~~89911-310002-0100~~	~~P310002899110100~~	~~卷扬机组合~~	~~Winch Assy~~	~~1~~		
	89911-310002-0101	P310002899110101	卷扬机组合	Winch Assy	1		2021款
8	89902-115000-0000	P115000899020000	卷扬机导向轮	Winch Guide Wheel	1		
9	92440-J00000-0600	pJ00000924400600	圆形塑料堵头Φ44	Round Plastic Plug Φ44	2		
10	90348-J00000-0500	PJ00000903480500	六角法兰面螺栓、弹垫和平垫组合件M10×28	Hexagon Bolt,Spring Washer&Plain Washer Assy M10×28	10		
11	GB/T16674-M10×1.25×30	BGB16674-M10×1.25×30	六角法兰面螺栓M10×1.25×30	Bolt Hexagon Flange Head M10×1.25×30	2		
12	GB/T16674-M10×1.25×40	BGB16674-M10×1.25×40	六角法兰面螺栓M10×1.25×40	Bolt Hexagon Flange Head M10×1.25×40	2		
13	GB/T16674-M6×20	BGB16674-M6×20	六角法兰面螺栓M6×20	Bolt Hexagon Flange Head M6×20	4		
14	90228-J00000-0200	PJ00000902280200	圆头带垫内六角螺栓M8*16	Bolt Hexagon Flange Head M8*16	3		
15	GB/T6183.2-M10×1.25	BGB6183.2-M10×1.25	非金属嵌件六角法兰面锁紧螺母M10×1.25	Nut Lock M10×1.25	8		
16	89901-115000-0000	P115000899010000	吊钩	Hook	1		
17	89909-115000-0000	P115000899090000	销轴φ9.5×40	Pin φ9.5×40	1		
18	89905-115000-0000	P115000899050000	手拉带	Hand Strap	1		
19	89904-115000-0000	P115000899040000	塑料卡环	Plastic Snap Ring	1		
20	GB/T91-2×30-BA	BGB91-2×30-BA	开口销 2×30	Pin 2×30	1		
21	GB/T16674-M6×16	P115000899050000	手拉带	Hand Strap	1	Y	
22	37740-115000-0000	P115000377400000	卷扬机继电器组合	Jenny Relay	1		
23	GB/T16674-M6×16	BGB16674-M6×16	六角法兰面螺栓M6×16	Bolt Hexagon Flange Head M6×16	4		
24	37155-311001-0000	P311001371550000	卷扬机控制开关	Switch - Winch	1	Y	
25	34400-115000-0000	P115000344000000	卷扬机电瓶线	Winch Cable	1		
26	34380-313001-0000	P313001343800000	卷扬机电机线	Winch Motor Wire	1		
27	89913-115000-0000	P115000899130000	电机正极防护罩	Motor Positive Shield	1		
28	89914-115000-0000	P115000899140000	电机负极防护罩	Motor Negative Shield	1		

二十三 、左下车门 Lower Door(L)

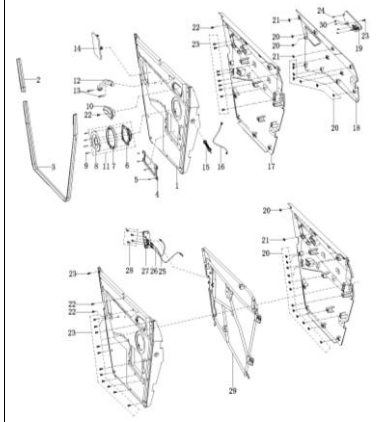

序号N	零部件图号 PartNo.	存货编码	零部件名称及规格	Description	数量Q		备注 REMARK
1	82451-338001-0000	P338001824510000	左车门内护板 I	Left Door Inner Guard Board I	1		
2	86804-338001-0300	P338001868040300	密封胶条C(L=230mm)	Sealing Strip C(L=230mm)	1	Y	
3	86804-338001-0100	P338001868040100	密封胶条C(L=1730mm)	Sealing Strip C(L=1730mm)	1	Y	
4	75240-321001-0000	P321001752400000	护网III	Net III	1		
5	GB/T70.3-M4×12	BGB70.3-M4×12	内六角沉头螺钉M4×12	Hexgon Recessed Screw M4×12	4		
6	~~38110-338001-0000~~	~~P338001381100000~~	~~喇叭（车门）~~	~~Speaker (Door)~~	~~1~~		
	38110-338001-0100	P338001381100100	喇叭（车门）	Speaker (Door)	1		永康松鹏（临时状态）
	38110-338001-0101	P338001381100101	喇叭（车门）	Speaker (Door)	1		永康松鹏(新状态），临时状态用完后切换：H 技字【2025 年】第 372 号
7	~~38108-338001-0000~~	~~P338001381080000~~	~~车门喇叭网罩安装座~~	~~Door Speaker Net Holder~~	~~1~~		
	38108-338001-0000	P338001381080200	车门喇叭网罩安装座	Door Speaker Net Holder			H 技字【2026 年】第 007 号
8	38109-338001-0000	P338001381090000	车门喇叭网罩	Door Speaker Net	1		
9	~~GB/T70.1-2000 M4×20~~	~~BGB70.1-2000 M4×20~~	~~内六角圆柱头螺钉M4×20~~	~~Hexagon Socket Head Screw M4×20~~	~~4~~		
		BGB70-M4×20	内六角圆柱头螺钉M4×20	Hexagon Socket Head Screw M4×20	4		上一项编码错误：2025.8.7
10	84550-338001-0000	P338001845500000	车门锁扣（L）	Door Latch locker（R）	1		
11	~~38100-338001-0000~~	~~P338001381000000~~	~~车门喇叭总成~~	~~Door Speaker Assy~~	~~1~~		
	38100-338001-0100	P338001381000100	车门喇叭总成	Door Speaker Assy	1		H 技字【2025 年】第 168号通知更改厂家
12	82462-338001-0000	P338001824620000	左车门把手	Left Door Handle	1		
13	GB/T 70.1-M8×30	BGB70.1-M8×30	内六角圆柱头螺钉M8×30	Hexagon Socket Head Screw M8×30	2		
14	82917-338001-0000	P338001829170000	调节视窗板 II	Cover Battery Box	1		
15	34101-338001-0000	P338001341010000	车门线束胶套	Door Harness Holder	1		
16	34130-338001-0000	P338001341300000	喇叭转接线1	Horn Transfer Cable 1	1		
17	82450-338001-0000	P338001824500000	左车门外护板 I	Right Door Outer Guard Board I	1		
18	82454-338001-00002A	P338001824540002A	左车门装饰罩：429C灰	Right Door Panel(Nardo Grey Pantone 429C)	1		
	82454-338001-000039	P338001824540039	左车门装饰罩：PMS200红	Right Door Panel(Red Pantone PMS200)			
	82454-338001-000056	P338001824540056	左车门装饰罩：7502C棕	Right Door Panel(Sand Pantone 7502C)			
	82454-338001-00009H	P338001824540009H	左车门装饰罩：ARID迷彩	Right Door Panel(Arid Camo)			
19	82460-338001-0000	P338001824600000	左车门把手	Left Door Handle	1		
20	90350-J00000-0200	PJ00000903500200	螺母夹M6×6	Clamp Nut M6×6	22		
21	90350-J00000-0300	PJ00000903500300	螺母夹M6×2	Circlip Nut M6×2	3		
22	90225-J00000-0000	PJ00000902250000	带盘内六角螺栓M6×12	Bolt Hexagon Socket Fangle M6×12	4		
23	90225-J00000-0100	PJ00000902250100	带盘内六角螺栓M6×16	Socket Hex Flat Head Bolt M6×16	22		
24	GB/T845-ST4.2×13	BGB845-ST4.2×13	十字槽盘头自攻螺钉ST4.2×13	Screw Cross Head Self Drilling ST4.2×13	4		
25	7293A-338001-0000	P3380017293A0000	车门拉索A	Door Cable A	1		
26	7293A-338001-0100	P3380017293A0100	车门拉索B	Door Cable B	1		
27	~~84590-338001-0000~~	~~P338001845900000~~	~~车门锁组合L~~	~~Door Latch Assy L~~	~~1~~		
	84590-338001-0100	P338001845900100	车门锁组合L	Door Latch Assy L	1		H 技字【2025 年】第591号通知更改

二十三 、左下车门 Lower Door(L)

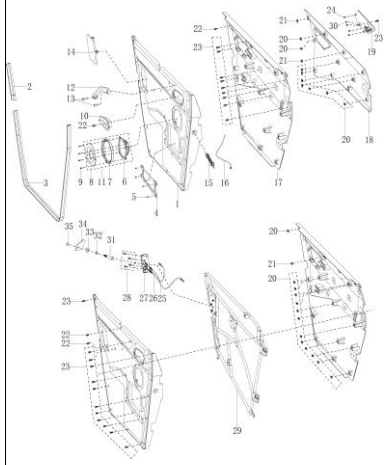

序号N	零部件图号 PartNo.	存货编码	零部件名称及规格	Description	数量O		备注 REMARK
28	90225-J00000-0500	PJ00000902250500	带盘内六角螺栓M6×30	Hexagon Socket Fangle Bolt M6×30	4		
29	515AN-338001-0000	P338001515AN0000	下车门焊接组合(L)	Lower Door Weld Assy (L)	1		
30	GB/T6187-M6	BGB6187-M6	金属嵌件六角法兰面锁紧螺母M6	Lock Nut M6	1		
31	84570-338001-0000	P338001845700000	不锈钢锁销	Stainless Steel Locking Pin	1		
32	GB/T93-10	BGB93-10	弹垫10	Spring Washer 10	1		
33	GB/T97.1-10	BGB97.1-10	平垫10	Plain Washer 10	1		
34	84572-338001-0000	P338001845720000	锁销安装支耳(L)	Locking Pin Mounting Bracket (L)	1		
35	GB/T6183.2-M10×1.25	BGB6183.2-M10×1.25	非金属嵌件六角法兰面锁紧螺母M10×1.25	Nut Lock M10×1.25	1		

二十四、右下车门Lower Door(R)

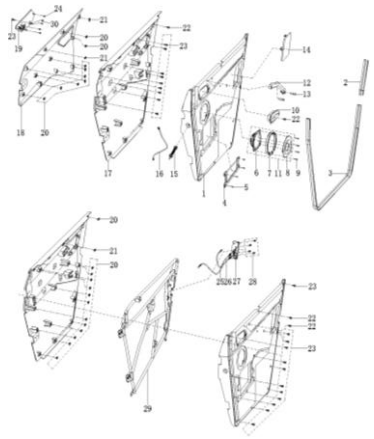

序号N	零部件图号 PartNo.	存货编码	零部件名称及规格	Description	数量Q		备注 REMARK
1	82456-338001-0000	P338001824560000	右车门内护板Ⅰ	Right Door Inner Guard Board Ⅰ	1		
2	86804-338001-0300	P338001868040300	密封胶条C(L=230mm)	Sealing Strip C(L=230mm)	1	Y	
3	86804-338001-0100	P338001868040100	密封胶条C(L=1730mm)	Sealing Strip C(L=1730mm)	1	Y	
4	75250-321001-0000	P321001752500000	护网Ⅳ	Net Ⅳ	1		
5	GB/T70.3-M4×12	BGB70.3-M4×12	内六角沉头螺钉M4×12	Hexgon Recessed Screw M4×12	4		
6	38110-338001-0000	P338001381100000	喇叭（车门）	Speaker (Door)	1		
7	~~38108-338001-0000~~	~~P338001381080000~~	~~车门喇叭网罩安装座~~	~~Door Speaker Net Holder~~	~~1~~		
	38108-338001-0200	P338001381080200	车门喇叭网罩安装座	Door Speaker Net Holder			H 技字【2026 年】第 007 号
8	38109-338001-0000	P338001381090000	车门喇叭网罩	Door Speaker Net	1		
9	~~GB/T70.1-2000 M4×20~~	~~BGB70.1-2000 M4×20~~	~~内六角圆柱头螺钉M4×20~~	~~Hexagon Socket Head Screw M4×20~~	~~4~~		
	GB/T70-M4×20	BGB70-M4×20	内六角圆柱头螺钉M4×20	Hexagon Socket Head Screw M4×20	4		
10	84560-338001-0000	P338001845600000	车门锁扣（R）	Door Latch locker（R）	1		
11	~~38100-338001-0000~~	~~P338001381000000~~	~~车门喇叭总成~~	~~Door Speaker Assy~~	~~1~~		
	38100-338001-0100	P338001381000100	车门喇叭总成	Door Speaker Assy			H 技字【2025 年】第 168号通知更改厂家
12	82463-338001-0000	P338001824630000	右车门把手	Right Door Handle	1		
13	GB/T 70.1-M8×30	BGB70.1-M8×30	内六角圆柱头螺钉M8×30	Hexagon Socket Head Screw M8×30	2		
14	82918-338001-0000	P338001829180000	调节视窗板Ⅲ	Maintainence Cover Ⅲ	1		
15	34101-338001-0000	P338001341010000	车门线束胶套	Door Harness Holder	1		
16	34130-338001-0000	P338001341300000	喇叭转接线1	Horn Transfer Cable 1	1		
17	82455-338001-0000	P338001824550000	右车门外护板Ⅰ	Right Door Outer Guard Board Ⅰ	1		
18	82459-338001-00002A	P338001824590002A	右车门装饰罩：429C灰	Right Door Panel(Nardo Grey Pantone 429C)	1		
	82459-338001-000039	P338001824590039	右车门装饰罩：PMS200红	Right Door Panel(Red Pantone PMS200)			
	32459-338001-000056	P338001324590056	右车门装饰罩：7502C棕	Right Door Panel(Sand Pantone 7502C)			
	32459-338001-00009H	P338001324590009H	右车门装饰罩：ARID迷彩	Right Door Panel(Arid Camo)			
19	~~82461-338001-0000~~	~~P338001824610000~~	~~右车门把手~~	~~Right Door Handle~~	~~1~~		质量改进，增加加强筋 H 技字【2025 年】第 022 号；2025.1.20
	82460-338001-0001	P338001824600001	左车门把手	Left Door Handle			
20	90350-J00000-0200	PJ00000903500200	螺母夹M6×6	Clamp Nut M6×6	22		
21	90350-J00000-0300	PJ00000903500300	螺母夹M6×2	Circlip Nut M6×2	3		
22	90225-J00000-0000	PJ00000902250000	带盘内六角螺栓M6×12	Bolt Hexagon Socket Fangle M6×12	4		
23	90225-J00000-0100	PJ00000902250100	带盘内六角螺栓M6×16	Socket Hex Flat Head Bolt M6×16	22		
24	GB/T845-ST4.2×13	BGB845-ST4.2×13	十字槽盘头自攻螺钉ST4.2×13	Screw Cross Head Self Drilling ST4.2×13	4		
25	~~7293A-338001-0000~~	~~P3380017293A0000~~	~~车门拉索A~~	~~Door Cable A~~	~~1~~		
	~~7293A-338001-0300~~	~~P3380017293A0300~~	~~车门拉索A~~	~~Door Cable A~~	~~1~~		
	7293A-338001-0301	P3380017293A0301	车门拉索A	Door Cable A	2		H 技字【2025 年】第 426 号;调整螺纹长度，提高装配效率
26	~~7293A-338001-0100~~	~~P3380017293A0100~~	~~车门拉索B~~	~~Door Cable B~~	~~1~~		
	~~7293A-338001-0200~~	~~P3380017293A0200~~	~~车门拉索B~~	~~Door Cable B~~			
	7293A-338001-0201	P3380017293A0201	车门拉索B	Door Cable B			H 技字【2025 年】第 426 号;调整螺纹长度，提高装配效率
27	~~89540-338001-0000~~	~~P338001895400000~~	~~车门锁组合R~~	~~Door Latch Assy R~~	~~1~~		
	89540-338001-0100	P338001895400100	车门锁组合R	Door Latch Assy R			H 技字【2025 年】第591号通知更改

二十四 、右下车门Lower Door(R)

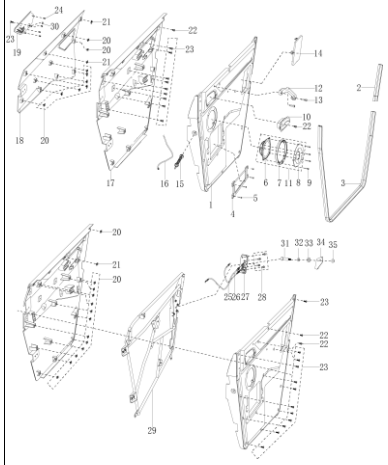

序号N	零部件图号 PartNo.	存货编码	零部件名称及规格	Description	数量Q		备注 REMARK
28	90225-J00000-0500	PJ00000902250500	带盘内六角螺栓M6×30	Hexagon Socket Fangle Bolt M6×30	4		
29	515AP-338001-0000	P338001515AP0000	下车门焊接组合(R)	Lower Door Weld Assy (R)	1		
30	GB/T6187-M6	BGB6187-M6	金属嵌件六角法兰面锁紧螺母M6	Lock Nut M6	1		
31	84570-338001-0000	P338001845700000	不锈钢锁销	Stainless Steel Locking Pin	1		
32	GB/T93-10	BGB93-10	弹垫10	Spring Washer 10	1		
33	GB/T97.1-10	BGB97.1-10	平垫10	Plain Washer 10	1		
34	84573-338001-0000	P338001845730000	锁销安装支耳(R)	Locking Pin Mounting Bracket(R)	1		
35	GB/T6183.2-M10×1.25	BGB6183.2-M10×1.25	非金属嵌件六角法兰面锁紧螺母M10×1.25	Nut Lock M10×1.25	1		

二十五 、货箱门Cargo Bed Tailgate

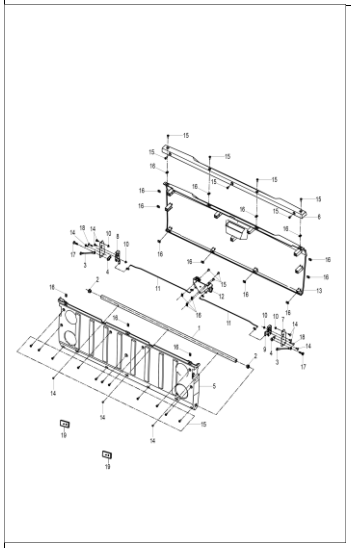

序号N	零部件图号 PartNo.	存货编码	零部件名称及规格	Description	数量Q		备注 REMARK
1	51588-315001-0000	P315001515880000	旋转衬管	Pivot Liner	1		
2	92450-J00000-0200	PJ00000924500200	翻边塑料衬套φ10.5×φ18	Flanging Plastic Bush φ10.5×φ18	2		
3	7292A-J00000-1300	PJ000007292A1300	货箱门拉索组合P	Tailgate Cable Assembly P	2		
4	51924-315001-0000	P315001519240000	门锁安装板Ⅱ	Door Latch Mount Ⅱ	2		
5	82709-338001-0000	P338001827090000	货箱门内衬板	Tailgate Inner Panel	1		
6	82716-338001-0000	P338001827160000	货箱门盖	Tailgate Cover Panel	1		
7	51923-315001-0000	P315001519230000	门锁安装板Ⅰ	Door Latch Mount Ⅰ	2		
8	89530-315001-0000	P315001895300000	货箱门锁组合	Tailgate Latch Assy	1		
9	89535-315001-0000	P315001895350000	货箱门锁组合Ⅱ	Tailgate Latch Assy Ⅱ	1		
10	GB/T6177.1-M6	BGB6177.1-M6	六角法兰面螺母M6	Hexagon Flange Head Nut M6	2		
11	89531-315001-0000	P315001895310000	货箱门锁拉杆	Tailgate Latch Lever	2		
12	89550-315001-0000	P315001895500000	货箱门开关组合	Tailgate Handle Assy	1		
13	82704-338001-0000	P338001827040000	货箱门板	Tailgate Panel(Nardo Grey Pantone 429C)	1		
14	90520-J00000-0500	PJ00000905200500	十字槽大盘头螺钉M6×16	Screw Cross Large Head M6×16	11		
15	90225-J00000-0100	PJ00000902250100	带盘内六角螺栓M6×16	Socket Hex Flat Head Bolt M6×16	21		
16	90350-J00000-0200	PJ00000903500200	螺母夹M6×6	Clamp Nut M6×6	18		
17	90227-J00000-0000	PJ00000902270000	内六角台阶螺栓M8×18-φ10×9	Inner Hex Step Bolt M8×18-φ10×9	2		
18	90520-J00000-0600	PJ00000905200600	十字槽大盘头螺钉M6×20	Screw Cross Large Head M6×20	2		
19	34810-102000-0000	P102000348100000	后反射器组合	Post-reflector assy	2		

二十六、货箱Cargo Bed

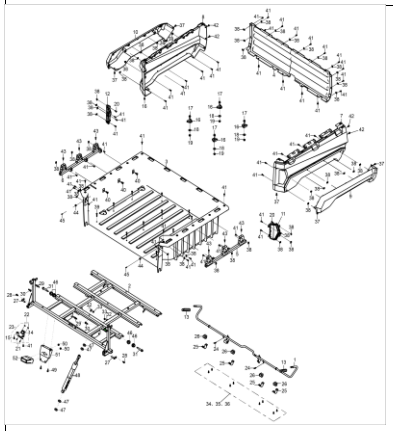

序号N	零部件图号 PartNo.	存货编码	零部件名称及规格	Description	数量Q		备注 REMARK
1	51589-338001-0000	P338001515890000	货箱翻转支架组合	Cargo Bed Release Lever	1		
2	51810-333006-0000	P333006518100000	货箱底板组合	Cargo Bed Bottom Plate	1		
3	82705-338001-0000	P338001827050000	塑料货箱	Cargo Bed	1		
4	82703-338001-0000	P338001827030000	货箱前板	Cargo Bed Front Panel	1		
5	51830-338001-0000	P338001518300000	货箱左侧板组合I	Left Cargo Bed Panel Assy I	1		
6	51840-338001-0000	P338001518400000	货箱右侧板组合I	Right Cargo Bed Panel Assy I	1		
7	82701-338001-00002A	P3380018270100002A	货箱左板：429C灰	Left Cargo Bed Panel (Nardo Grey Pantone 429C)	1		
	82701-338001-000039	P3380018270100039	货箱左板：PMS200红	Left Cargo Bed Panel (Red Pantone PMS200)			
	82701-338001-000056	P3380018270100056	货箱左板：7502C棕	Left Cargo Bed Panel (Sand Pantone 7502C)			
	82701-338001-00009H	P338001827010009H	货箱左板：ARID迷彩	Left Cargo Bed Panel (Arid Camo)			
8	82702-338001-00002A	P3380018270200002A	货箱右板：429C灰	Right Cargo Bed Panel(Nardo Grey Pantone 429C)	1		
	82702-338001-000039	P3380018270200039	货箱右板：PMS200红	Right Cargo Bed Panel (Red Pantone PMS200)			
	82702-338001-000056	P3380018270200056	货箱右板：7502C棕	Right Cargo Bed Panel (Sand Pantone 7502C)			
	82702-338001-00009H	P338001827020009H	货箱右板：ARID迷彩	Right Cargo Bed Panel (Arid Camo)			
9	82805-338001-0000	P338001828050000	挡泥板（左后）（上）	Rear Upper Mud Guard (L)	1		
10	82806-338001-0000	P338001828060000	挡泥板（右后）（上）	Rear Upper Mud Guard (R)	1		
11	35350-325001-0000	P325001353500000	左后位灯组合	Left Rear Light Assy	1	Y	
12	35375-325001-0000	P325001353750000	右后位灯组合	Right Rear Light Assy	1	Y	
13	93401-338001-0000	P338001934010000	货箱翻转手柄	Tailgate Lever	2		
14	36101-338001-0011	P338001361010011	后摄像头	Rear Camero	1		
15	515AT-338001-0000	P338001515AT0000	后摄像头安装支耳II	Rear Camero Mounting Bracket II	1		
16	51530-315001-0000	P315001515300000	拉带挂钩	Cargo Bed Hook	4		
17	GB/T16674-M10×30	BGB16674-M10×30	六角法兰面螺栓M10×30	Hexagon Flange Bolt M10×30	4		
18	90605-J00000-0100	PJ00000906050100	平垫φ10×φ28×2	Plain Washer Φ10×Φ28×2	4		
19	GB/T6183.2-M10×1.25	BGB6183.2-M10×1.25	非金属嵌件六角法兰面锁紧螺母M10×1.25	Nut Lock M10×1.25	4		
20	90225-J00000-0000	PJ00000902250000	带盘内六角螺栓M6×12	Bolt Hexagon Socket Fangle M6×12	2		
21	GB/T70.1-2000-M4×10	BGB70.1-2000-M4×20	内六角圆柱头螺钉M4×10	Hexagon Socket Head Screw M4×10	2		
22	GB/T6177.1-M4	BGB6177.1-M4	非金属嵌件六角锁紧螺母M4	Hexagon Socket Head Nut M4	2		
23	36101-338001-0010	P338001361010010	后摄像头组合	Rear Camero Assy	1		
24	96100-J00000-0700	PJ00000961000700	拉簧H	Tension Spring H	2	Y	

二十六 、货箱Cargo Bed

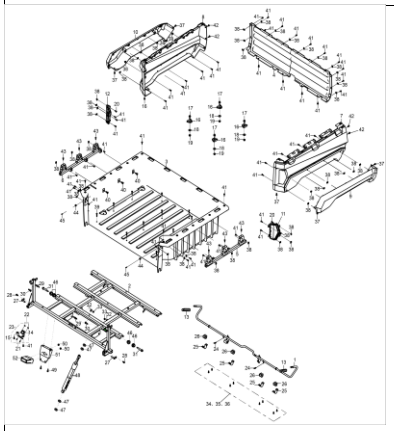

序号N	零部件图号 PartNo.	存货编码	零部件名称及规格	Description	数量Q		备注 REMARK
25	51590-112000-0000	P112000515900000	货箱翻转支架固定板	Cargo Bed Release Lever Bracket	4		
26	93140-J00000-0000	PJ00000931400000	平衡杆减震套	Swaybar Damping Sleeve	4	Y	
27	51592-117000-0000	P117000515920000	货箱转轴	Cargo Bed Spindle	2		
28	GB/T16674-M8×16	BGB16674-M8×16	六角法兰面螺栓M8×16	Bolt Hexagon Flange Head M8×16	2		
29	90216-J00000-0100	PJ00000902160100	台阶螺栓M8×15-φ10×10-53	Blot Hexagon Socket Shoulder M8×15-φ10×10-53	2		
30	90227-J00000-0100	PJ00000902270100	内六角台阶螺栓M8×15-φ10×14.5	Blot Hexagon Socket Shoulder M8×15-φ10×14.5	2		
31	90215-J00000-0100	PJ00000902150100	六角法兰面台阶螺栓M8×φ12×58×75	Step Bolt M8×φ12×58×75	2		
32	90605-J00000-0600	PJ00000906050600	平垫φ8×28×1.5	Plain Washerφ8×28×1.5	2		
33	GB/T6183.2-M8	BGB6183.2-M8	非金属嵌件六角法兰面锁紧螺母M8	Lock Nut M8	2		
34	GB/T16674-M6×16	BGB16674-M6×16	六角法兰面螺栓M6×16	Bolt Hexagon Flange Head M6×16	8		
35	BGB93-6	BGB93-6	弹垫6	Spring Washer 6	8		
36	BGB97.1-6	BGB97.1-6	平垫φ6.4Xφ12X1.6	Plain Washer φ6.4Xφ12X1.6	8		
37	90520-J00000-0500	PJ00000905200500	十字槽大盘头螺钉M6×16	Screw Cross Large Head M6×16	6		
38	90350-J00000-0200	PJ00000903500200	螺母夹M6×6	Clamp Nut M6×6	52		
39	90228-J00000-0000	PJ00000902280000	圆头带垫内六角螺栓M6*35	Bolt Hexagon Flange Head M6*35	11		
40	90228-J00000-0300	PJ00000902280300	圆头带垫内六角螺栓M8*25	Bolt Hexagon Flange Head M8*25	6		
41	90225-J00000-0100	PJ00000902250100	带盘内六角螺栓M6×16	Socket Hex Flat Head Bolt M6×16	48		
42	90288-J00000-0000	PJ00000902880000	内六角沉头螺钉M6×16	Hexagon Recessed Screw M6×16	4		
43	90225-J00000-0400	PJ00000902250400	带盘内六角螺栓M6×20	Bolt Hexagon Socket Fangle M6×20	6		
44	93357-J00000-0000	PJ00000933570000	货箱门减震垫	Cargo Door Shock Absorber	2		
45	GB/T845-ST4.2×13	BGB845-ST4.2×13	十字槽盘头自攻螺钉ST4.2×13	Screw Cross Head Self Drilling ST4.2×13	2		
46	92450-J00000-0700	PJ00000924500700	翻边塑料衬套φ12×φ18	Bushing - Plastic 12×18	4		
47	93110-J00000-0300	PJ00000931100300	橡胶平垫φ13×10	Rubber Washer 13×10	4	Y	
48	72710-315001-0000	P315001727100000	货箱气弹簧组合	Cargo Bed Gas Spring Assy	1	Y	
49	GB/T16674-M6×16	BGB16674-M6×16	六角法兰面螺栓M6×16	Bolt Hexagon Flange Head M6×16	2		
50	GB/T6183.2-M6	BGB6183.2-M6	非金属嵌件六角法兰面锁紧螺母M6	Non-metallic Insert Hex Flange Lock Nut M6	2		
51	51537-333006-0000	P333006515370000	牌照安装板 I	License plate mounting plate I	1		
52	35325-311001-0000	P311001353250000	后牌照灯组合	Rear license plate light assy	1		

二十七、覆盖件 Hood Components

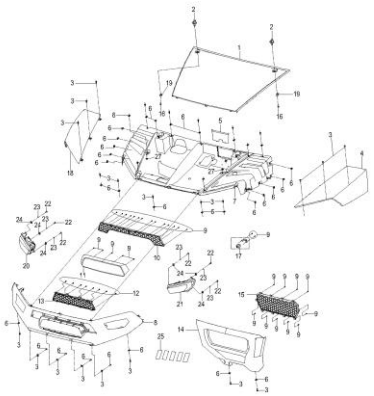

序号N	零部件图号 PartNo.	存货编码	零部件名称及规格	Description	数量Q		备注 REMARK
1	82224-338001-00002A	P3380018222400002A	前车体盖装饰Ⅰ：429C灰	Hood (Nardo Grey Pantone 429C)	1		
	82224-338001-000039	P3380018222400039	前车体盖装饰Ⅰ：PMS200红	Hood (Red Pantone PMS200)			
	82224-338001-000056	P3380018222400056	前车体盖装饰Ⅰ：7502C棕	Hood (Sand Pantone 7502C)			
	82224-338001-00009H	P3380018222400009H	前车体盖装饰Ⅰ：ARID迷彩	Hood (Arid Camo)			
2	82211-338001-0000	P338001822110000	旋钮开关	Hand shank lock	2		
3	90225-J00000-0400	PJ00000902250400	带盘内六角螺栓M6×20	Bolt Hexagon Socket Fangle M6×20	17		
4	82233-338001-00002A	P3380018223300002A	左前大灯装饰罩：429C灰	Left Hood Panel (Nardo Grey Pantone 429C)	1		
	82233-338001-000039	P3380018223300039	左前大灯装饰罩：PMS200红	Left Hood Panel (Red Pantone PMS200)			
	82233-338001-000056	P3380018223300056	左前大灯装饰罩：7502C棕	Left Hood Panel (Sand Pantone 7502C)			
	82233-338001-00009H	P3380018223300009H	左前大灯装饰罩：ARID迷彩	Left Hood Panel (Arid Camo)			
5	82910-338001-0000	P338001829100000	调节视窗板	Cover Battery Box	1		
6	90350-J00000-0200	PJ00000903500200	螺母夹M6×6	Clamp Nut M6×6	26		
7	82208-338001-0000	P338001822080000	前面板	Interior Hood	1		
8	82201-338001-0000	P338001822010000	前大灯安装板	Head Light Dash	1		
9	BGB2670.3-ST4.2×13	BGB2670.3-ST4.2×13	十字槽盘头自攻螺钉ST4.2×13	Screw Cross Head Self Drilling ST4.2×13	29		
10	82243-338001-0000	P338001822430000	前中网I	Middle Net I	1		
11	83371-338001-00002A	P338001822110000	前装饰罩：429C灰	Front Decorative Cover (Nardo Grey Pantone 429C)	1		
	83371-338001-000039	P3380018337100039	前装饰罩：PMS200红	Front Decorative Cover (Red Pantone PMS200)			
	83371-338001-000056	P3380018337100056	前装饰罩：7502C棕	Front Decorative Cover (Sand Pantone 7502C)			
	83371-338001-00009H	P3380018337100009H	前装饰罩：ARID迷彩	Front Decorative Cover (Arid Camo)			
12	BGB2670.3-ST4.8×16	GB/T2670.3-ST4.8×16	十字槽盘头自攻螺钉SST4.8×16	Screw Cross Head Self Drilling ST4.8×16	8		
13	82244-338001-0000	P338001822440000	前中网II	Middle Net II	1		
14	82106-338001-0000	P338001821060000	前保险杠下护板	Front Bumper Support Plate	1		
15	82245-338001-0000	P338001822450000	前中网III	Middle Net III	1		
16	90347-J00000-0400	PJ00000903470400	十字小盘头自攻螺钉ST6×20	Self-tapping Screw ST6×20	2		
17	36101-338001-0001	P338001361010001	前摄像头	Front Camera	1		
18	82234-338001-00002A	P3380018223400002A	右前大灯装饰罩：429C灰	Right Hood Panel (Nardo Grey Pantone 429C)	1		
	82234-338001-000039	P3380018223400039	右前大灯装饰罩：PMS200红	Right Hood Panel (Red Pantone PMS200)			
	82234-338001-000056	P3380018223400056	右前大灯装饰罩：7502C棕	Right Hood Panel (Sand Pantone 7502C)			
	82234-338001-00009H	P3380018223400009H	右前大灯装饰罩：ARID迷彩	Right Hood Panel (Arid Camo)			

二十七、覆盖件 Hood Components

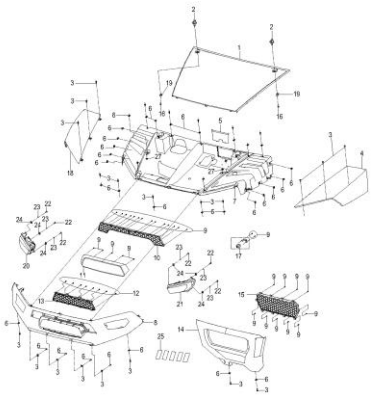

序号N	零部件图号 PartNo.	存货编码	零部件名称及规格	Description	数量Q		备注 REMARK
19	82109-338001-0000	P338001821090000	旋钮开关下体	Hand shank lock	2		
20	35130-325001-0000	P325001351300000	右前照灯组合	Head Light Assembly - Right	1	Y	
21	35110-325001-0000	P325001351100000	左前照灯组合	Head Light Assembly - Left	1	Y	
22	GB/T5785-M6-30-B	BGB5785-M6×30-B	六角头螺栓M6×30(不锈钢)	Hexagon Head Bolt M6×30	6		
23	96200-J00000-1500	PJ00000962001500	压簧Q	Pressure Spring Q	6		
24	GB/T39-M6-B	BGB39-M6-B	C级方螺母M6(不锈钢)	Square Nut (Grade C)	6		
25	82311-311001-0000	P311001823110000	前面板装饰盖	Decoreation Cover	5		HS394-6
				Decoreation Cover	4		HS404-4
26	BGB2670.3-ST4.2×12	GB/T2670.3-ST4.2×12	十字槽盘头自攻螺钉ST4.2×12	Screw Cross Head Self Drilling ST4.2×12	2		
27	93130-J00000-0600	PJ00000931300600	条孔卡槽减震垫φ17.5×φ27.5×2.5	Damping Pad φ17.5×φ27.5×2.5	2		

二十七、覆盖件 Hood Components

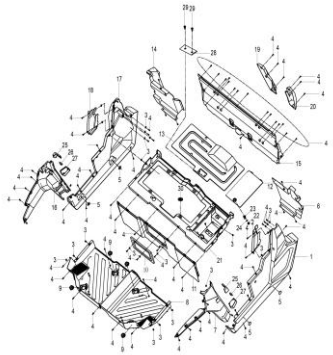

序号N	零部件图号 PartNo.	存货编码	零部件名称及规格	Description	数量Q		备注 REMARK
1	82406-338001-0000	P338001515190000	驾驶室外左护板Ⅰ	Side Panel - Middle Left	1		
2	82558-338001-0000	P338001825580000	顶棚左护罩	Top - Left Protector Cover	1		
3	90350-J00000-0200	PJ00000903500200	螺母夹M6×6	Clamp Nut M6×6	19		
4	90225-J00000-0100	PJ00000902250100	带盘内六角螺栓M6×16	Socket Hex Flat Head Bolt M6×16	76		
5	93100-J00000-0400	PJ00000931000400	球面橡胶堵头	Plastic Plug	4		
6	82503-338001-0000	P338001825030000	后挡泥板I	Rear Fender	1		
7	82207-338001-0000	P338001822070000	左前轮边条Ⅰ	Side Panel - Front Left	1		
8	~~82421-338001-0000~~	~~P338001824210000~~	~~脚踏板~~	~~Footrest~~	~~1~~		
	82421-338001-0001	P338001824210001	脚踏板	Footrest			H 技字【2025 年】第 487 号优化装配质量;售 后 及 未 按 通知 2025430 变更车架装配，需去掉增加的卡扣
9	B18258100	B18258100	漏水开关	Drain Hole Plug	4		
10	82917-315001-0000	P315001829170000	调节视窗板II	Maintainence Cover II	1		
11	82423-315001-000123	P31500182423000123	座垫下护板II	Seating supportII	1		
12	82906-315001-0000	P315001829060000	蓄电池盖	Cover Battery	1		
13	82910-338001-0000	P338001829100000	调节视窗板	Maintainence Cover	1		
14	82504-338001-0000	P338001825040000	后挡泥板II	Rear Mudguard II	1		
15	71219-338001-0000	P338001712190000	靠背安装板I	Seating Protector I	1		
16	82210-338001-0000	P338001822100000	右前轮边条Ⅰ	Side Panel - Front Right	1		
17	82412-338001-0000	P338001824120000	驾驶室外右护板Ⅰ	Side Panel - Middle Right	1		
18	82559-338001-0000	P338001825590000	顶棚右护罩	Top - Right Protector Cover	1		
19	82804-315001-0000	P315001828040000	后保护板II	Rear BumperII	1		
20	82803-315001-0000	P315001828030000	后保护板Ⅰ	Rear BumperⅠ	1		
21	82405-338001-0000	P338001824050000	座垫下护板Ⅰ	Seating support Ⅰ	1		
22	93350-J00000-0000	PJ00000933500000	旋钮开关预紧橡胶套	Rubber Washer	1		
23	82211-311001-0000	P311001822110000	旋扭开关	Lock - Battery Box Cover	1		
24	90605-J00000-0700	PJ00000906050700	平垫φ15×φ22×1	Washer Plat Φ15×Φ22×1	1		
25	92402-J00000-0100	PJ00000924020100	方型塑料堵头30×30	Plastic Plug 30×30	2		
26	92420-J00000-0100	PJ00000924200100	矩形塑料堵头40×60	Plastic Plug 40×60	2		
27	92402-J00000-0200	PJ00000924020200	方形塑料堵头40×40	Plastic Cap 40×40	2		
28	51562-312001-0000	P3120015156200000	调试窗把手	Lock - Engine Cover	1		
29	GB/T845-ST3.9×10	BGB845-ST3.9×10	十字槽盘头自攻螺钉ST3.9×10	Screw Cross Head Self Drilling ST3.9×10	2		
30	93130-J00000-0400	PJ00000931300400	条孔卡槽减振垫φ8×17	Rubber Washer φ8×17	6		

二十七、覆盖件 Hood Components

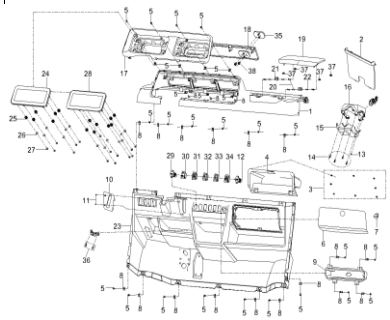

序号N	零部件图号 PartNo.	存货编码	零部件名称及规格	Description	数量Q		备注 REMARK
1	83359-338001-0000	P338001833590000	仪表上罩	Instrument Upper Cover	1		
2	82910-338001-0000	P338001829100000	调节视窗板	Maintainence Cover	1		
3	90225-J00000-0000	PJ00000902250000	带盘内六角螺栓M6×12	Bolt Hexagon Socket Fangle M6×12	8		
4	82465-338001-0000	P338001824650000	置物箱下体	Storage Box Lower Part	1		
5	90225-J00000-0100	PJ00000902250100	带盘内六角螺栓M6×16	Socket Hex Flat Head Bolt M6×16	28		
6	82462-338001-0000	P338001824640000	置物箱上体	Storage Box Upper Part	1		
7	89511-115000-0000	P315001895100000	置物箱锁组合	Lock Storage Box Cover Assembly	1		
8	90350-J00000-0200	PJ00000903500200	螺母夹M6×6	Clamp Nut M6×6	28		
9	82317-338001-0000	P338001823170000	照明开关盖	Head Light Switch Cover	1		
10	82316-338001-0000	P338001823160000	仪表板调节盖	Instrument Panel Maintainence Cover	1		
11	GB/T70.3-M4×12	BGB70.3-M4×12	内六角沉头螺钉M4×12	Hexgon Recessed Screw M4×12	2		
12	32530-B1-00	B13253000	USB输出座组合	USB Output Base Combination	1		
13	GB/T2670.3-ST4.2×12	BGB2670.3-ST4.2×12	十字槽盘头自攻螺钉ST4.2×12	Screw Cross Head Self Drilling ST4.2×12	1		
14	GB/T818-M5×16-D	BGB818-M5×16-D	十字槽盘头螺钉M5×16	Cross Recessed Screw M5×16	4		
15	82306-338001-0000	P338001823060000	方向柱罩II	Cover Steering Colum Ⅱ	1		
16	82307-338001-0000	P338001823070000	方向柱罩III	Cover Steering Colum Ⅲ	1		
17	82308-338001-0000	P338001823080000	仪表罩	Cover Meter Unit support	1		
18	82921-338001-0000	P338001829210000	调节视窗板IV	Maintainence Cover Ⅳ	1		
19	82303-338001-0000	P338001823030000	置物箱盖	Storage Box Cover	1		
20	BGB6183.2-M4	BGB6183.2-M4	M4非金属自锁螺母	Nut M4	16		
21	51777-323001-0000	P323001517770000	金属铰链组合	Metal Hinge Assy	4		
22	GB/T70.3-M4×12	BGB70.3-M4×12	内六角沉头螺钉M4×12	Hexgon Recessed Screw M4×12	16		
23	~~82301-338001-0000~~	~~P338001823010000~~	~~仪表板~~	~~Dash Assembly~~	~~1~~		
	82301-338001-0001	P338001823010001	仪表板	Dash Assembly			H 技字【2025 年】第 487 号优化装配质量;售 后 及 未 按 通知 2025430 变更车架装配，需去掉增加的卡扣
24	36100-333006-0000	P333006361000000	组合仪表部件	Meter Unit	1	Y	
25	36105-B1-00	B13610500	仪表橡胶安装	Instrument Rubber Mount Pad	16		
26	GB/T96.1-6	BGB96.1-6	平垫6	Washer Plat 6	16		
27	GB/T6177.1-M6	BGB6177.1-M6	六角法兰面螺母M6	Hexagon Flange Head Nut M6	16		
28	36150-333006-0000	P333006361500000	中控部件	Center Console	1		
29	37175-115000-0000	P115000371750000	DC插座组合	DC Socket	1		
30	37140-311001-0000	P311001371400000	二四驱转换开关	Switch - 2W/4W	1	Y	

二十七、覆盖件 Hood Components

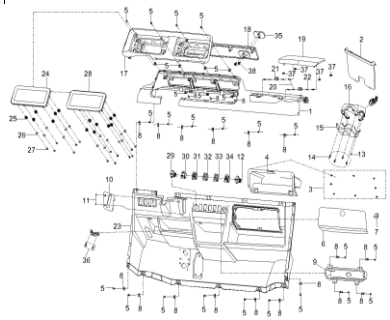

序号N	零部件图号 PartNo.	存货编码	零部件名称及规格	Description	数量Q		备注 REMARK
31	37145-311001-0000	P311001371450000	前桥差速转换开关	Switch - Front Differential	1	Y	
32	37130-311001-0000	P311001371300000	应急灯开关	Switch - Hazard Light	1	Y	
33	37155-311001-0000	P311001371550000	卷扬机控制开关	Switch - Winch	1	Y	
34	37150-311001-0000	P311001371500000	后桥差速转换开关	Switch - Rear Differential	1	Y	HS404-4
35	82313-338001-0000	P338001823130000	仪表罩装饰条I	Instrument Cover Decoration Panel I	1		
36	92974-J00000-0000	PJ00000929740000	内六角自攻螺钉ST5×16	Self-tapping Screw ST5×16	2		
37	93130-J00000-0600	PJ00000931300600	条孔卡槽减震垫φ17.5×φ27.5×2.5	Damping Pad φ17.5×φ27.5×2.5	2		
38	90230-J00000-0000	PJ00000902300000	平头内六角自攻钉4.8×16	Self-tapping Screw 4.8×16	2		

二十七、覆盖件 Hood Components

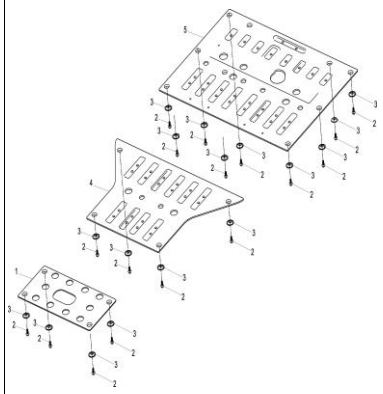

序号N	零部件图号 PartNo.	存货编码	零部件名称及规格	Description	数量Q		备注 REMARK
1	82505-315001-0000	P315001825050000	前底板	Front Skid Plate	1		
2	51524-115000-0000	P115000515240000	帽型垫	Cap-Shaped Cushion	17		
3	GB/T16674-M6×16	BGB16674-M6×16	六角法兰面螺栓M6×16	Bolt Hexagon Flange Head M6×16	17		
4	82505-112000-0000	P112000825050000	前底板	Front Skid Plate	1		
5	82506-116000-0000	P116000825060000	中底板	Middle Skid Plate	1		

二十八 、电器件Electric Parts

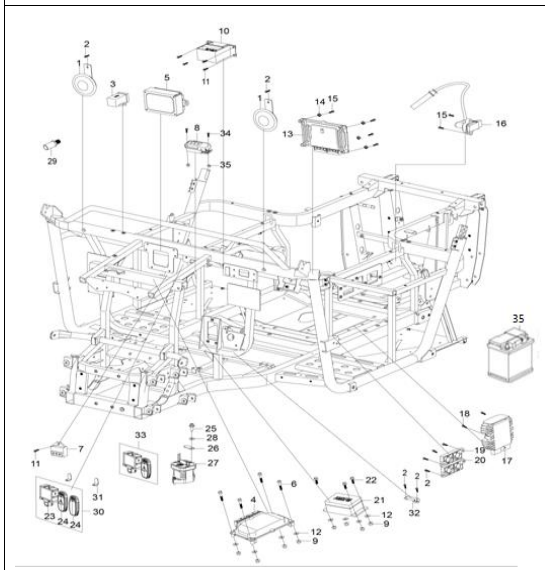

序号N	零部件图号 PartNo.	存货编码	零部件名称及规格	Description	数量Q		备注 REMARK
1	3461A-115000-0000	P1150003461A0000	喇叭	Horn	2	Y	此状态用完后使用下一项状态：2025.9.17
	3461A-115000-0001	P1150003461A0001	喇叭	Horn	2		H 技字【2025 年】第 346 号;改为银触点式喇叭降低喇叭的干扰能力
2	GB/T16674-M6×16	BGB16674-M6×16	六角法兰面螺栓M6×16	Bolt Hexagon Flange Head M6×16	10		
3	37735-B1-00	B13773500	主继电器组合	Main Relay	1	Y	
4	37830-333006-0000	P333006378300000	BCM控制器	BCM Controller	1		
5	62350-309001-0000	P309001623500000	助力转向控制器组合	EPS Controller	1	Y	HS404-4
6	GB/T16674-M6×35	BGB16674-M6×35	六角法兰面螺栓M6×35	Bolt Hexagon Flange Head M6×35	4		
7	3461A-338001-0000	P3380013461A0000	左右转向提示喇叭	Turn Signal Horn	1		
8	29110-B1-00	B12911000	四路保险盒	Fuse Box	1		
9	GB/T6183.2-M6	BGB6183.2-M6	非金属嵌件六角法兰面锁紧螺母M6	Non-metallic Insert Hex Flange Lock Nut M6	8		
10	37740-115000-0000	P115000377400000	卷扬机继电器组合	Jenny Relay	1	Y	
11	GB/T16674-M6×20	BGB16674-M6×20	六角法兰面螺栓M6×20	Bolt Hexagon Flange Head M6×20	5		
12	GB/T96.1-6	BGB96.1-6	平垫6	Washer Plat 6	8		
13	392000-J00000-0003	PJ00000392000003	ECU控制器部件	ECU (Engine Control Unit)	1		白坯件
	392000-J00000-0200	PJ00000392000200	ECU控制器部件	ECU (Engine Control Unit)	1		已刷写程序
14	93135-J00000-0200	PJ00000931350200	条孔卡槽减震垫φ8×12	Shock Absorber Pad φ8×12	4		
15	GB/T16674-M6×25	BGB16674-M6×25	六角法兰面螺栓M6×25	Bolt Hexagon Flange Head M6×16	5		
16	331000-321001-0010	P321001331000010	点火线圈部件	Ignition Coil	1	Y	
17	32100-311001-0000	P311001321000000	调压整流器	Rectifier	1	Y	
18	GB/T16674-M6×35	BGB16674-M6×35	六角法兰面螺栓M6×35	Bolt Hexagon Flange Head M6×35	2		
19	38350-J00000-0350	PJ00000383500350	350A保险盒（成品）	350A Fuse Box	1		
20	38350-J00000-0125	PJ00000383500125	125A保险盒（成品）	125A Fuse Box	1		
21	38620-338001-0000	P338001386200000	中控天线	Center Console Antenna	1		
22	GB/T16674-M6×16	BGB16674-M6×16	六角法兰面螺栓M6×16	Bolt Hexagon Flange Head M6×16	4		
23	38610-323101-0000	P323101386100000	PKE控制器	PKE Controller	1		HS404-4
24	38650-333007-0000	P333007386500000	遥控钥匙	Remote Key	2		HS404-4
25	GB/T9074.3-M4×16	BGB9074.3-M4×16	十字槽盘头螺钉和弹簧垫圈组合件 M4×16	Cross Recessed Head And Spring Washer Assy M4×16	1		
26	51525-303001-0000	P303001515250000	启动继电器支耳	Strap Starter Relay Plated	1		
27	37705-B1-00	B13770500	起动继电器	Stator Relay	1		
28	GB/T97.1-4	BGB97.1-4	平垫 φ4×9×1	Plain Washer φ4×9×1	1		
29	37741-310002-0000	P310002377410000	卷扬机遥控组合	Winch Remote Controller	1	Y	
30	38611-323101-0000	P323101386110000	PKE控制器套件	PKE Controller	1		HS404-4

二十八 、电器件Electric Parts

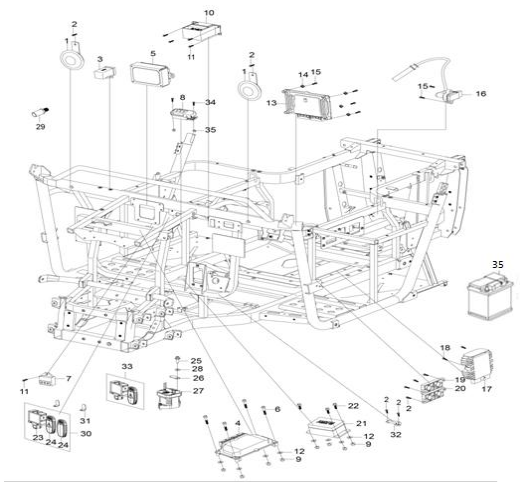

序号N	零部件图号 PartNo.	存货编码	零部件名称及规格	Description	数量Q		备注 REMARK
31	5110A-B1-00	B15110A00	PKE控制器安装支架	PKE Controller Mounting Bracket	2		HS404-4
32	38620-B1-00	B13862000	室内低频天线	Low Frequency Antenna	1		HS404-4
33	GB/T6177.1-M4	BGB6177.1-M4	六角法兰面螺母M4	He×agon Nut M4	2		
34	GB/T70.1-M4×25-D	BGB70.1-M4×25-D	内六角圆柱头螺钉M4×25	Hexagon Socket Head Screw M4×25	2		
35	32200-312001-0001	P312001322000001	蓄电池部件	Battery 12V60Ah	1		

二十七 、电器件Electric Parts

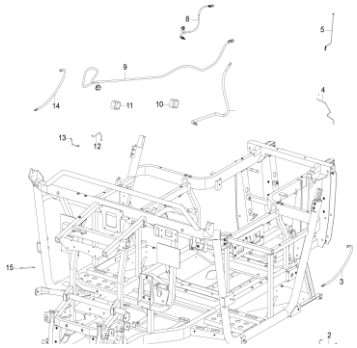

序号N	零部件图号 PartNo.	存货编码	零部件名称及规格	Description	数量Q		备注 REMARK
1	34100-333006-0000	P333006341000000	主电缆部件	Main Cable Component	1		HS394-6
	34100-323101-0000	P323101341000000	主电缆部件	Main Cable Component for HS404-4			HS404-4
2	34310-318001-0000	P318001343100000	电源正极线	Power Supply Positive Line	1		
3	34340-310002-0000	P310002343400000	调压整流器输出线	Cable Rectifier Outlet	1		
~~4~~	~~34124-338001-0000~~	~~P338001341240000~~	~~后保险杠灯附线~~	~~Rear Bumper Light Cable~~	~~1~~		
~~5~~	~~36104-338001-0000~~	~~P338001361040000~~	~~后摄像头附线~~	~~Rear Camera Cable~~	~~1~~		
6	34400-310002-0000	P310002344000000	卷扬机电瓶线	Winch Cable	1		
7	34320-318001-0000	P318001343200000	电源负极连接线	Cable Ground	1		
8	33101-115H00-0001	P115H00331010001	点火线圈连接线	Connector Wire For Ignition Coil	1		
9	34119-325001-0000	P325001341190000	踏板附线	Pedal Attachment Wire	1		
10	93505-B1-08	B19350508	四品双排插座防水堵B	Four Grade Double Row Socket Waterproof Plug B	2		
11	93505-B1-04	B19350504	四品双排插座防水堵A	Four Grade Double Row Socket Waterproof Plug A	1		
12	34450-318001-0000	P318001344500000	接地线	Ground Grounding wire	1		
13	34402-321001-0000	P321001344020000	保险线	Line of Safety	1		
	34402-338001-0000	P338001344020000	保险线	Line of Safety	1		
14	34450-338001-0010	P338001344500010	车架接地线	Ground Lead	1		
15	34360-338001-0000	P338001343600000	面板开关附线1	Cable - Switch Kit 1	1		
16	34200-338001-0000	P338001342000000	电喷电缆部件	EFI Cable	1		
17	93505-B1-06	B19350506	Molex四品双排插座防水堵	Molex Four Grade Double Row Socket Waterproof Plug	1		
18	34130-338001-0000	P338001341300000	喇叭转接线1	Horn Transfer Cable 1	2		

7/17更改