# HS500ATV-4 2013

Cylinder head assembly

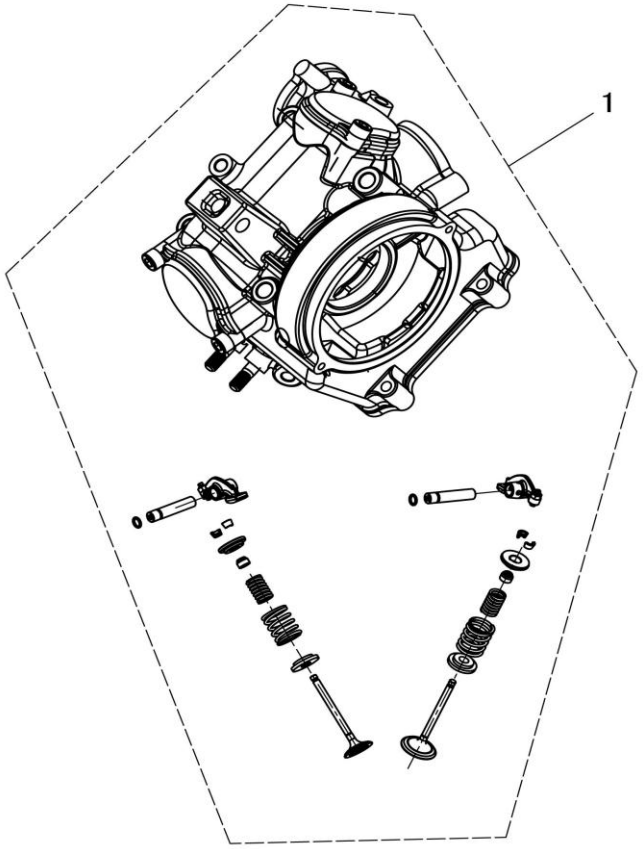


| No. | Part No. | Part name and Description | Q'ty | REMARK |
|---|---|---|---|---|
| 1 | 1220A-004C-0000 | Cylinder Head Assy(EFI Engine) | 1 | |
| | 1220A-004-0000 | Cylinder Head Assy(Carburetor Engine) | 1 | |

## CYLINDER HEAD

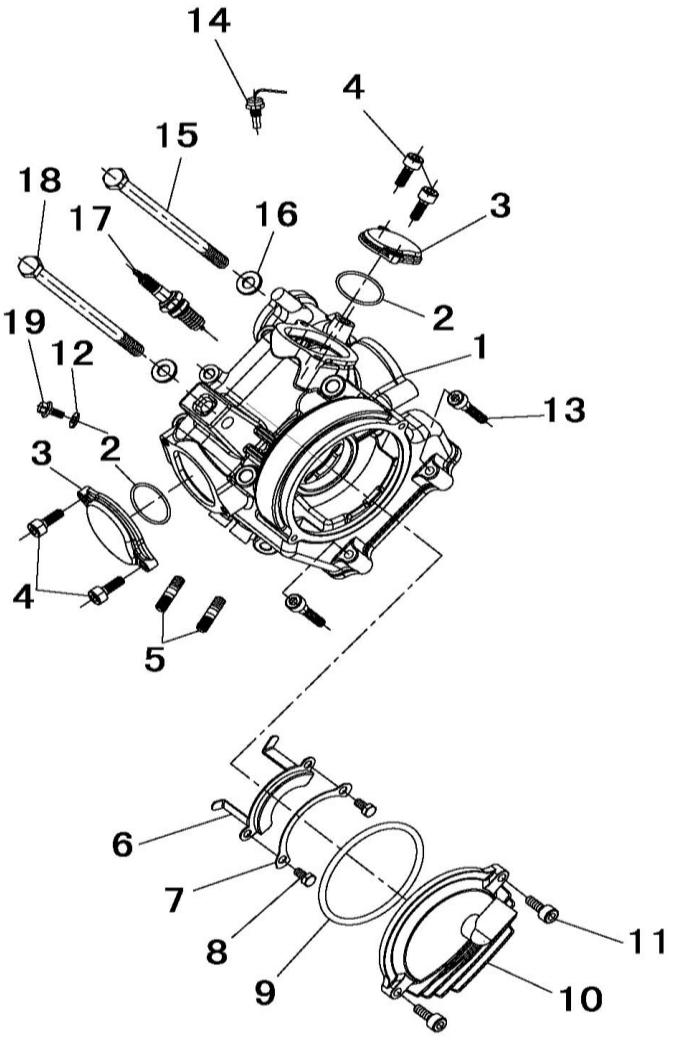


| No. | Part No. | Part name and Description | Q'ty | REMARK |
|---|---|---|---|---|
| 1 | 12200-004C-0000 | Cylinder Head Comp(EFI Engine) | 1 | |
| 2 | 91205-002-0000 | O-Ring 58×2.4 | 2 | |
| 3 | 12361-004-0000 | Value Cover | 2 | |
| 4 | 93432-0602-0060 | Inner Hexangular Screw M6×20, | 6 | |
| 5 | 93142-0804-5060 | Stud Bolt M8×45 | 2 | |
| 6 | 93102-004-0000 | Pressure Plate,Cam Shaft | 1 | |
| 7 | 93112-004-0000 | Bolt Limit Board | 1 | |
| 8 | 93103-0601-6060 | Hexagon head bolt M6×16 | 2 | |
| 9 | 91229-002-0000 | O-ring 107×2.4 | 1 | |
| 10 | 12331-004-0000 | Cylinder Head Left Cover | 1 | |
| 11 | 93432-0602-5060 | Inner Hexangular Screw M6×25 | 2 | |
| 12 | 90601-002-0000 | Alu. Washer φ6×φ12×1.5 | 2 | |
| 13 | 93432-0804-0060 | Inner Hexangular Screw M8×40 | 2 | |
| 14 | 36550-004-0000 | Water Temperature Alarm Switch | 1 | |
| 15 | 90035-004-0000 | Bolt M10×1.25×250 | 2 | |
| 16 | 90602-002-0000 | Copper Washer φ10×φ18×2 | 4 | |
| 17 | 33300-002-0000 | Spark Plug (NGK DR8EA) | 1 | |
| 18 | 90034-004-0000 | Bolt M10×1.25×223 | 2 | |
| 19 | 93107-0601-4060 | Flange Bolt M6×14 | 1 | |
| | | | | |
| | | | | |
| | | | | |
| | | | | |
| | | | | |
| | | | | |
| | | | | |
| | | | | |

EFI Intake Components

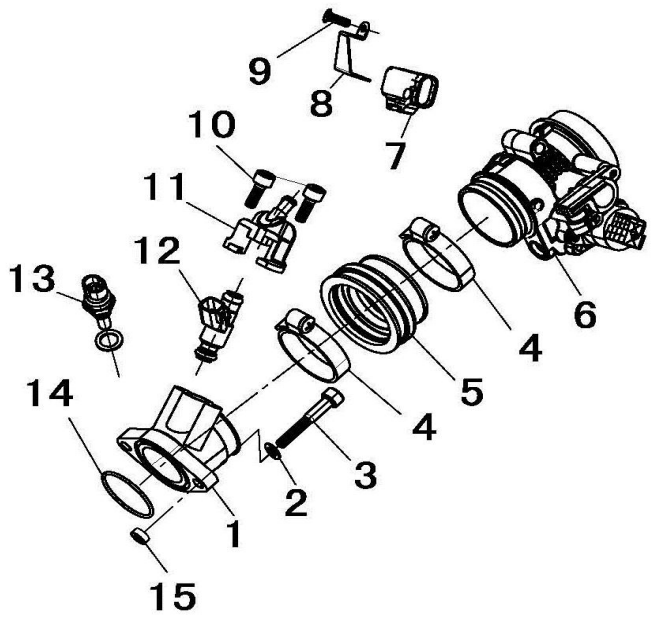


| No. | Part No. | Part name and Description | Q'ty | ReMark |
|---|---|---|---|---|
| 1 | 14800-004C-0000 | Inlet Pipe | 1 | |
| 2 | 90611-002-0000 | Washer 8×16×1 | 2 | |
| 3 | 93432-0805-0060 | Inner Hexangular Screw M8×50 | 2 | |
| 4 | 90402-004C-0000 | Hoop 50～70 | 2 | |
| 5 | 14801-004C-0000 | Joint Inlet Pipe | 1 | |
| 6 | 16100-004C-0000 | Dampers（D46-5） | 1 | |
| 7 | 16723-010-0000 | Intake air temperature / pressure sensor 28086011 | 1 | |
| 8 | 16701-010-0000 | TMAP Press Plate | 1 | |
| 9 | 93404-0400-8060 | Cross Recess Head Screw M4×8 | 1 | |
| 10 | 93432-0602-0060 | Inner Hexangular Screw M6×20 | 2 | |
| 11 | 16430-010-0000 | Mounting Seat,Fuel Injector | 1 | |
| 12 | 16400-004C-0000 | Fuel Injector 28160355 | 1 | |
| 13 | 36540-010-0000 | Water Temperature Sensor | 1 | |
| 14 | 91207-002-0000 | O-Ring 44×2 | 1 | |
| 15 | 14811-004C-0000 | Bushing (500) | 2 | |
| | | | | |
| | | | | |
| | | | | |
| | | | | |

## VALVE

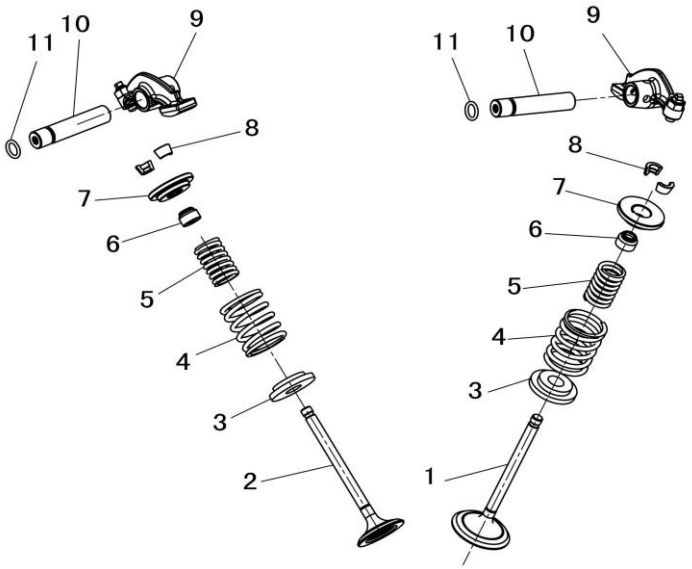


| No. | Part No. | Part name and Description | Q'ty | ReMark |
|---|---|---|---|---|
| 1 | 14711-002-0000 | Inlet Valve | 1 | |
| 2 | 14721-002-0000 | Outlet Valve | 1 | |
| 3 | 14775-002-0000 | Spring Seat, Valve | 2 | |
| 4 | 14751-002-0000 | Spring, Valve Outer | 2 | |
| 5 | 14761-002-0000 | Spring, Valve Inner | 2 | |
| 6 | 91225-002-0000 | Fuel Shield Cover Comp | 2 | |
| 7 | 14771-002-0000 | Cotter Seat- Valve | 2 | |
| 8 | 14781-002-0000 | Lock Clip, Valve | 4 | |
| 9 | 14430-004-0000 | Swing Arm Comp, Valve | 2 | |
| 10 | 14451-002-0000 | Rocker Arm Shaft Ⅰ | 2 | |
| 11 | 91227-002-0000 | O-Ring 9×2 | 2 | |
| | | | | |
| | | | | |
| | | | | |
| | | | | |
| | | | | |
| | | | | |
| | | | | |
| | | | | |
| | | | | |
| | | | | |
| | | | | |

## CYLINDER

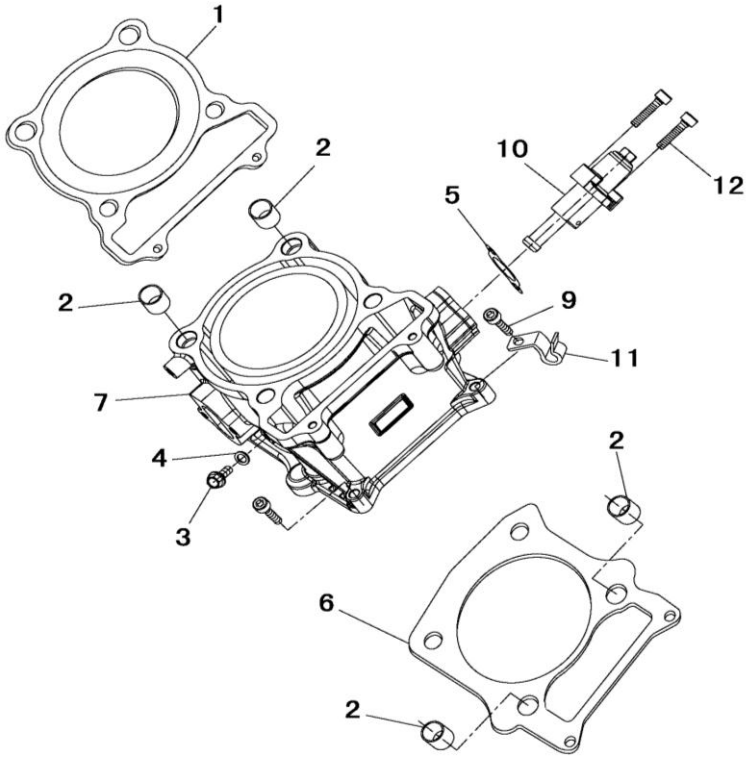


| No. | Part No. | Part name and Description | Q'ty | ReMark |
|---|---|---|---|---|
| 1 | 12250-004-0000 | Cylinder Head Gasket | 1 | |
| 2 | 90802-002-0000 | Cotter Pin 14×16 | 4 | |
| 3 | 93107-0601-2060 | Flange Bolt M6×12 | 1 | GB/T 5787-1986 |
| 4 | 90601-002-0000 | Aluminum Washer 6×13×1.5 | 1 | |
| 5 | 14508-002-0000 | Tensioner Gasket | 1 | |
| 6 | 12150-004-0000 | Gasket, Cylinder Body | 1 | |
| 7 | 12100-004-0000 | Cylinder Body Comp | 1 | |
| | | | | |
| 9 | 93432-0602-5060 | Cylinder Screw M6×25,inner | 2 | |
| 10 | 14500-004-0000 | Tensioner Comp | 1 | |
| 11 | 91501-004-0000 | Pipe clamp | 1 | |
| 12 | 93107-0602-5060 | Hexagon flange bolts M6 × 25 | 2 | |
| | | | | |
| | | | | |
| | | | | |
| | | | | |
| | | | | |
| | | | | |
| | | | | |
| | | | | |
| | | | | |
| | | | | |

## CAMSHAFT CHAIN

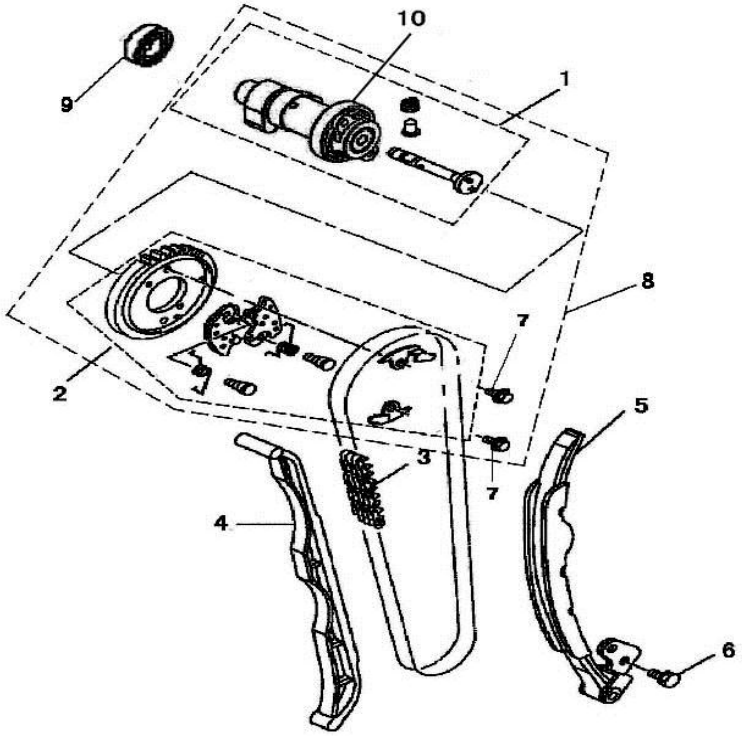


| No. | Part No. | Part name and Description | Q'ty | ReMark |
|---|---|---|---|---|
| 1 | 14110-004-0000 | Cam Shaft Comp | 1 | |
| 2 | 14320-004-0000 | Driven Sprocket Assy, Timing | 1 | |
| 3 | 14000-004-0000 | China (M7-6.35-124) | 1 | |
| 4 | 14630-004-0000 | Guide Plate | 1 | |
| 5 | 14520-004-0000 | Tension Plate Comp | 1 | |
| 6 | 93146-0601-6060 | Bolt M6×16 | 2 | |
| 7 | 93109-0701-1060 | Flange BoltM7×11 | 2 | |
| 8 | 14100-004-0001 | Camshaft assembly | 1 | |
| 9 | 93706-0043-8000 | Bearing 6004Z | 1 | |
| 10 | 93706-0280-0000 | Bearing 60/28 | 1 | |
| | | | | |
| | | | | |
| | | | | |
| | | | | |
| | | | | |
| | | | | |
| | | | | |
| | | | | |
| | | | | |
| | | | | |
| | | | | |
| | | | | |

## CRANKSHAFT PISTON

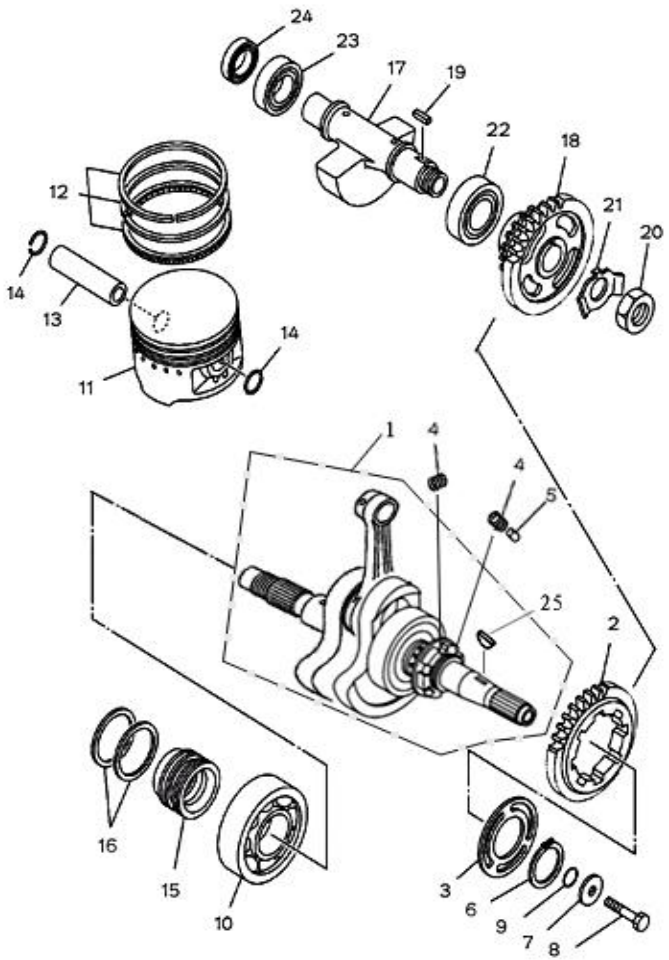


| No. | Part No. | Part name and Description | Q'ty | ReMark |
|---|---|---|---|---|
| 1 | 13200-004-0000 | Connecting Rod comp, Crank | 1 | |
| 2 | 13304-004-0000 | Balanced Initiative Gear | 1 | |
| 3 | 13305-004-0000 | Clamper Plate, Initiative Gear | 1 | |
| 4 | 13302-004-0000 | Buffer Spring | 8 | |
| 5 | 13303-004-0000 | PIN φ6×9.36 | 4 | |
| 6 | 93338-3500-0000 | Circlip φ35 | 1 | |
| 7 | 90608-002-0000 | Washer φ10×φ32×5 | 1 | |
| 8 | 93103-1001-4060 | Hexagon Head Bolt M10×1.25×40 | 1 | |
| 9 | 91207-007-0000 | O-Ring 16×3 | 1 | |
| 10 | 93706-3070-0000 | Bearing 6307 | 1 | |
| 11 | 13101-004-0000 | Piston | 1 | |
| 12 | 13120-004-0000 | Piston Ring Comp | 1 | |
| 13 | 13111-004-0000 | Piston Pin | 1 | |
| 14 | 91301-002-0000 | Circlip,Piston Pin | 2 | |
| 15 | 13401-004-0000 | Seal Ring Sheath | 1 | |
| 16 | 13402-003-0000 | Seal Ring | 2 | |
| 17 | 13300-004-0000 | Balanced Shaft Assy | 1 | |
| 18 | 13320-004-0000 | Driven Gear- Balance Shaft Assy | 1 | |
| 19 | 93600-0120-5052 | Key B5×12 | 1 | |
| 20 | 93202-1800-0060 | Nut M18×1 | 1 | |
| 21 | 93132-004-0000 | Thrust Washer B | 1 | |
| 22 | 93706-3050-0000 | Bearing 6305 | 1 | |

## CRANKSHAFT PISTON

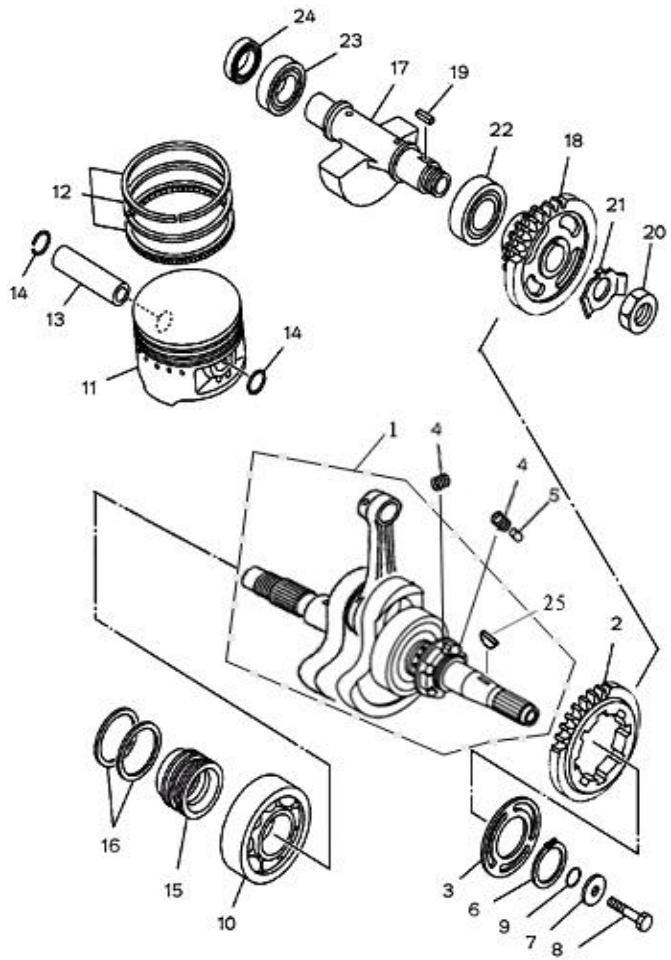


| No. | Part No. | Part name and Description | Q'ty | ReMark |
|---|---|---|---|---|
| 23 | 93706-3040-0000 | Bearing 6304 | 1 | |
| 24 | 91101-004-0000 | Oil Seal 20×30×7 | 1 | |
| 25 | 13201-004-0000 | Semicircle Key | 1 | |
| | | | | |
| | | | | |
| | | | | |
| | | | | |
| | | | | |
| | | | | |
| | | | | |
| | | | | |
| | | | | |
| | | | | |
| | | | | |
| | | | | |
| | | | | |
| | | | | |
| | | | | |
| | | | | |
| | | | | |
| | | | | |
| | | | | |

## CRANKCASE

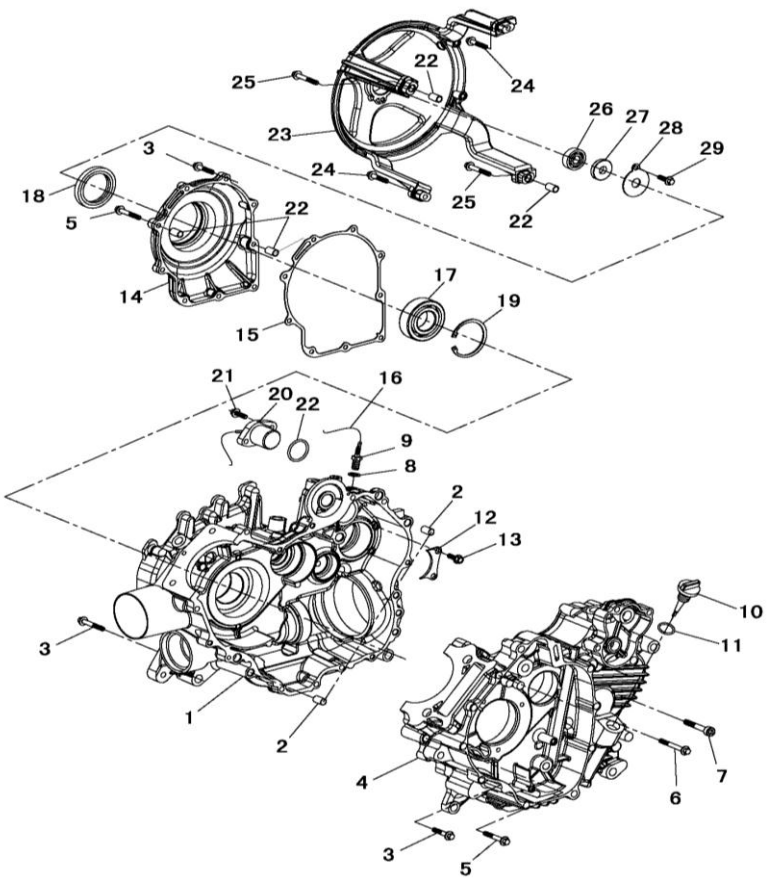


| No. | Part No. | Part name and Description | Q'ty | ReMark |
|---|---|---|---|---|
| 1 | 11200-007-0000 | Right Crankcase Comp | 1 | |
| 2 | 90804-007-0000 | Dowel Pin φ9× φ12×16 | 2 | |
| 3 | 93107-0603-0060 | Flange Bolt M6×30 | 19 | |
| 4 | 11100-007-0000 | Left Crankcase Comp | 1 | |
| 5 | 93107-0604-0060 | Flange Bolt M6×40 | 4 | |
| 6 | 93109-0605-5060 | Flange Bolt M6×55 | 1 | |
| 7 | 93432-0804-0060 | Inner Hexangular Screw M8×40 | 3 | |
| 8 | 37180-004-0000 | Gear Switch | 1 | |
| 9 | 90603-002-0000 | Washer φ10×φ16×1 | 1 | |
| 10 | 15651-004-0000 | Gauge, Oil Level | 1 | |
| 11 | 91202-002-0000 | O-Ring 18×2.4 | 1 | |
| 12 | 93103-004-0000 | Press Plate-Main Shaft Bearing | 1 | |
| 13 | 93107-0601-6060 | Flange Bolt M6×16 | 2 | |
| 14 | 21240-004-0000 | Bearing Seat, Outer Cover | 1 | |
| 15 | 21241-004-0000 | Seal Cushion, Bearing Seat | 1 | |
| 16 | 37181-004-0000 | leads ,Gear | 1 | |
| 17 | 93716-0100-0000 | Bearing 16010 | 1 | |
| 18 | 91102-004-0000 | Oil seal 35×65×9 | 1 | |
| 19 | 90707-003-0000 | Circlip φ80 | 1 | |
| 20 | 37120-004-0000 | Gear Show Assy | 1 | |
| 21 | 93146-0601-6060 | Bolt M6×16 | 2 | |
| 22 | 93109-0602-0060 | Flange Bolt M6×20 | 2 | |

## CRANKCASE

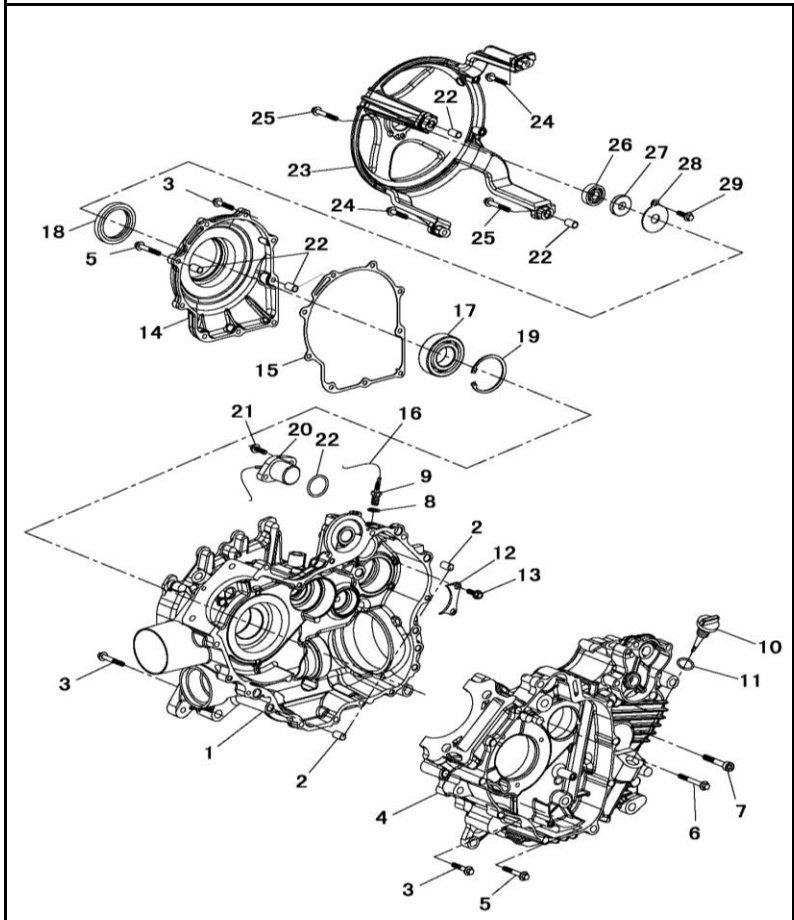


| No. | Part No. | Part name and Description | Q'ty | ReMark |
|---|---|---|---|---|
| 23 | 11330-004-0000 | Protection Cover Bracket,Cluth | 1 | |
| 24 | 93109-0603-2060 | Flange Bolt M6×32 | 2 | |
| 25 | 93109-0604-0060 | Flange Bolt M6×40 | 2 | |
| 26 | 93706-2013-8000 | Bearing 6201 2Z | 1 | |
| 27 | 91101-003-0000 | Oil Seal 12×32×6 | 1 | |
| 28 | 91320-003-0000 | Oil Press Plate | 1 | |
| 29 | 93107-0601-2060 | Flange Bolt M6×12 | 1 | |
| | | | | |
| | | | | |
| | | | | |
| | | | | |
| | | | | |
| | | | | |
| | | | | |
| | | | | |
| | | | | |
| | | | | |
| | | | | |
| | | | | |
| | | | | |
| | | | | |
| | | | | |

## CRANKCASE COVER 1

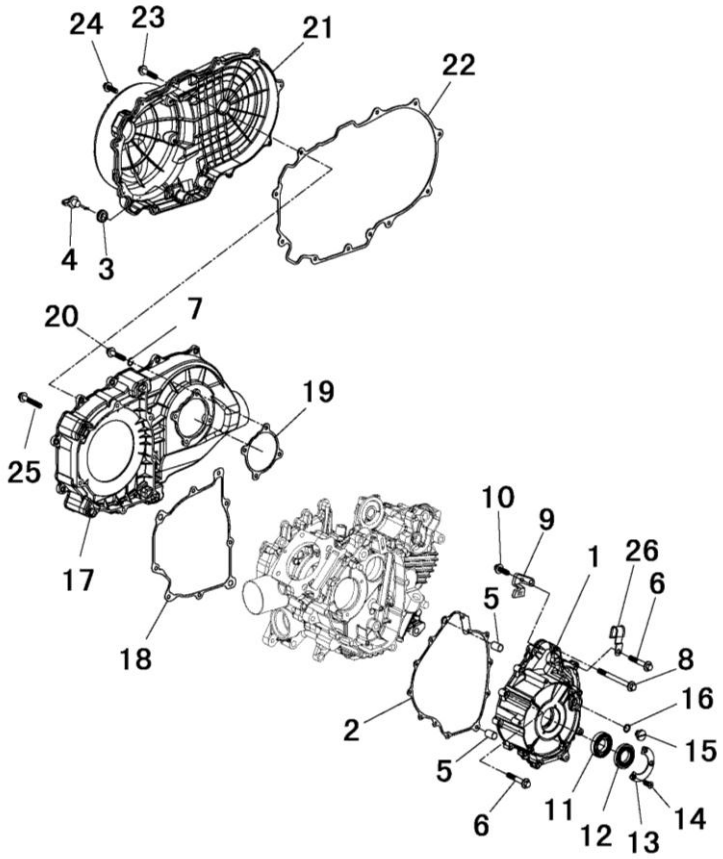


| No. | Part No. | Part name and Description | Q'ty | ReMark |
|---|---|---|---|---|
| 1 | 11300-004-0000 | Cover-Left | 1 | |
| 2 | 11323-004-0000 | Gasket ,Left front | 1 | |
| 3 | 11403-003-0000 | Rubber Sheath | 1 | |
| 4 | 11404-003-0000 | Piled Head, Clutch Cover | 1 | |
| 5 | 90803-010-0000 | Cotter Pin φ10×16 | 2 | |
| 6 | 93107-0603-0060 | Flange Bolt M6×30 | 9 | |
| 7 | 93315-0600-0000 | Washer φ 6 | 7 | |
| 8 | 93107-0604-0060 | Flange Bolt M6×40 | 4 | |
| 9 | 93141-004-0000 | Press Wire Plate-stator | 1 | |
| 10 | 93107-0601-2060 | Flange Bolt M6×12 | 2 | |
| 11 | 93706-0280-0000 | Bearing 60/28 | 1 | |
| 12 | 91103-003-0000 | Oil Seal 28×52×8.5 | 1 | |
| 13 | 93117-002-0000 | Pressure Plate,Left Front | 1 | |
| 14 | 93405-0501-2060 | Screw M5×12 | 2 | |
| 15 | 11325-003-0000 | Hand Hole Cover | 1 | |
| 16 | 91217-004-0000 | O-Ring 13.4×2.35 | 1 | |
| 17 | 11450-004-0000 | Cover Seat Comp,Cluth | 1 | |
| 18 | 11451-004-0000 | Gasket-Clutch Cover Ⅰ | 1 | |
| 19 | 11452-004-0000 | Gasket-Clutch Cover Ⅱ | 1 | |
| 20 | 93109-0603-2060 | Flange Bolt M6×32 | 7 | |
| 21 | 11420-004-0000 | Cover Comp,Cluth | 1 | |
| 22 | 11423-004-0000 | Gasket-Clutch Cover | 1 | |

## CRANKCASE COVER 1

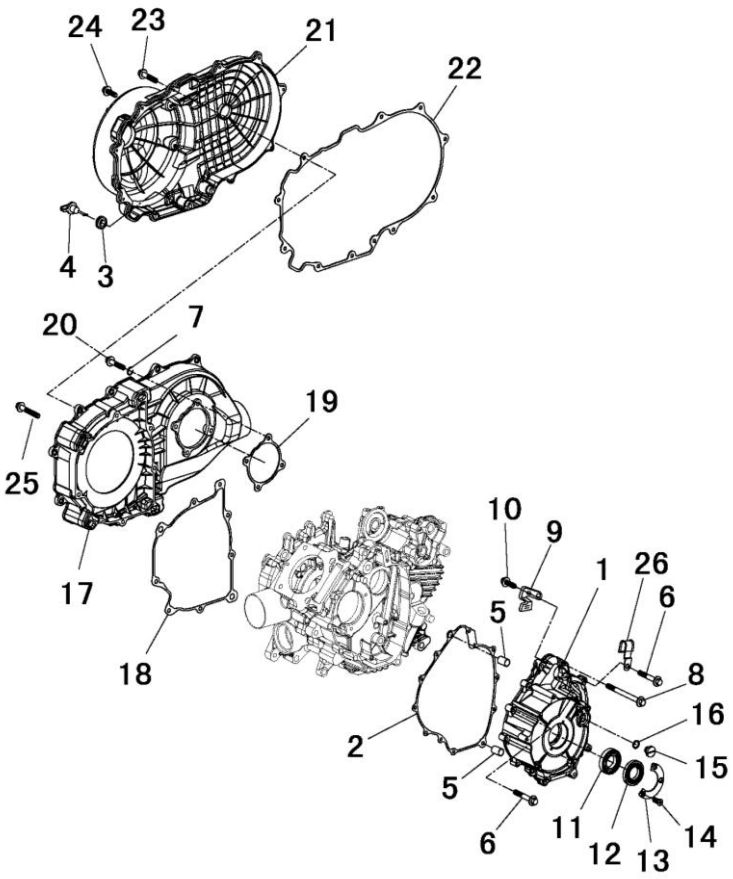


| No. | Part No. | Part name and Description | Q'ty | ReMark |
|---|---|---|---|---|
| 23 | 93109-0602-5060 | Flange Bolt M6×25 | 12 | |
| 24 | 93109-0601-6060 | Flange Bolt M6×16 | 2 | |
| 25 | 93109-0605-0060 | Flange Bolt M6×50 | 2 | |
| 26 | 93142-004-0000 | Clamp | 1 | |

## TRANSMISSION

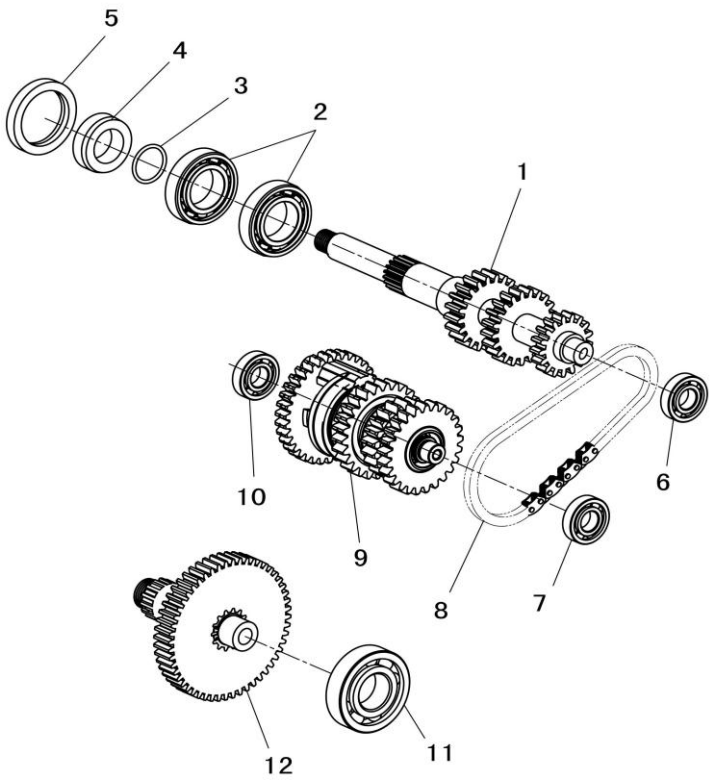


| No. | Part No. | Part name and Description | Q'ty | ReMark |
|---|---|---|---|---|
| 1 | 22211-004-0000 | Main Shaft | 1 | |
| 2 | 93706-0060-0000 | Bearing 6006 | 2 | GB/T 276-1994 |
| 3 | 22203-003-0000 | Collar Sheath 26×42×14.7 | 1 | |
| 4 | 91204-003-0000 | O-Ring 26.1×2.4 | 1 | |
| 5 | 91104-003-0000 | Fuel Seal 42×55×8 | 1 | |
| 6 | 93706-2030-0000 | Bearing 6203 | 1 | GB/T 276-1994 |
| 7 | 93706-2020-0000 | Bearing 6202 | 1 | GB/T 276-1994 |
| 8 | 22010-004-0000 | Chain With Gear Type M9-9.25-34 | 1 | |
| 9 | 22220-004-0000 | Middle Shaft Comp | 1 | |
| 10 | 93706-2033-0000 | Bearing 6203DLA8 | 1 | GB/T 276-1994 |
| 11 | 93706-3030-0000 | Bearing 6303 | 1 | GB/T 276-1994 |
| 12 | 22400-004-0000 | X Output Shaft Assy | 1 | |

## MIDDLE DRIVE GEAR

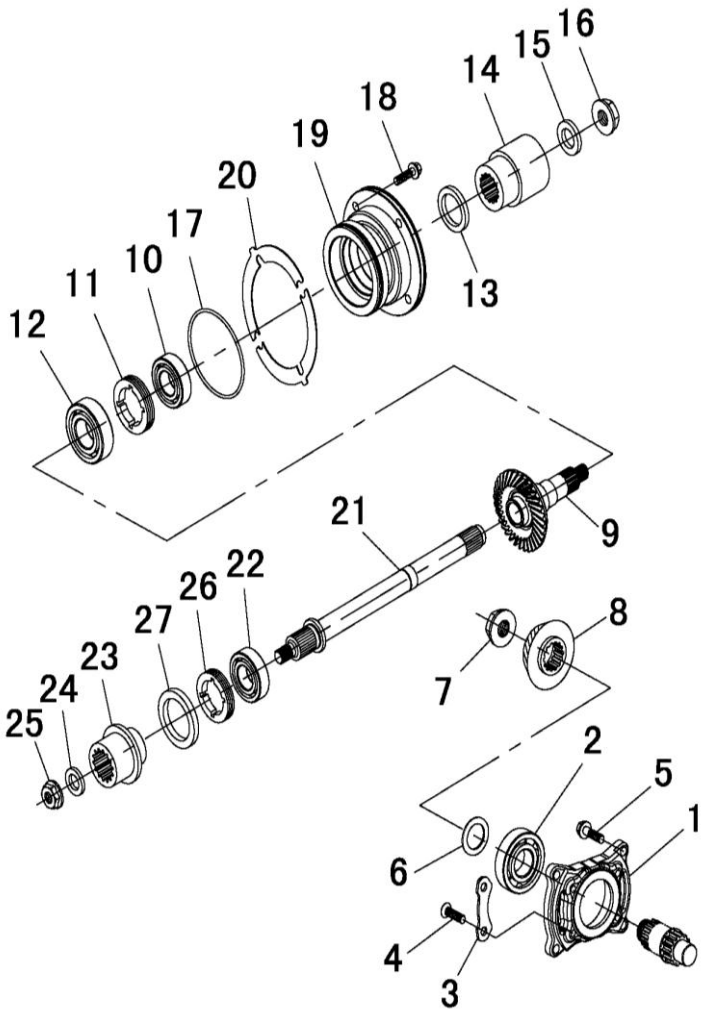


| No. | Part No. | Part name and Description | Q'ty | ReMark |
|---|---|---|---|---|
| 1 | 22140-004-0000 | Bearing Seat,X output Shaft | 1 | |
| 2 | 93706-3050-0000 | Bearing 6305 | 1 | GB/T 276-1994 |
| 3 | 93116-003-0000 | Press Plate,X Bearing | 2 | |
| 4 | 93409-0802-5060 | Screw M8×25 | 4 | GB/T 819.2-1997 |
| 5 | 93107-0803-0060 | Flange Bolt M8×30 | 4 | GB/T 5789-1986 |
| 6 | 90606-003-0000 | Washer φ26×φ38× （0.10～0.60） | 1 | 7种规格 |
| 7 | 93202-2200-0060 | Nut M22×1 | 1 | GB/T 6172.1-2000 |
| 8 | 22141-004-0000 | Driver Toper Gearwheel | 1 | |
| 9 | 22150-004-0000 | Driven Toper Gearwheel | 1 | |
| 10 | 93706-3220-0000 | Bearing 63/22 | 1 | GB/T 276-1994 |
| 11 | 22158-004-0000 | Locked Ring M60×1.5 | 1 | |
| 12 | 93706-2070-0000 | Bearing 6207 | 1 | GB/T 276-1994 |
| 13 | 91106-003-0000 | Oil Seal 30×46×8 | 1 | |
| 14 | 22181-007-0000 | Flange Coupling | 1 | |
| 15 | 90607-004-0000 | Washer φ16.5×φ28×4 | 1 | |
| 16 | 93232-0600-0040 | Nut M6 | 1 | |
| 17 | 91207-004-0000 | O-ring 88×2.8 | 1 | |
| 18 | 93146-0803-0060 | Bolt M8×30 | 4 | GB/T 9074.14-2002 |
| 19 | 22151-004-0000 | Bearing Seat,X Output Shaft | 1 | |
| 20 | 93115-004-0000 | WASHER （0.10～0.60） | 2 | 7种规格 |
| 21 | 22156-004-0000 | Y Output Shaft | 1 | |
| 22 | 93706-2050-0000 | Bearing 6205 | 1 | GB/T 276-1994 |

MIDDLE DRIVE GEAR

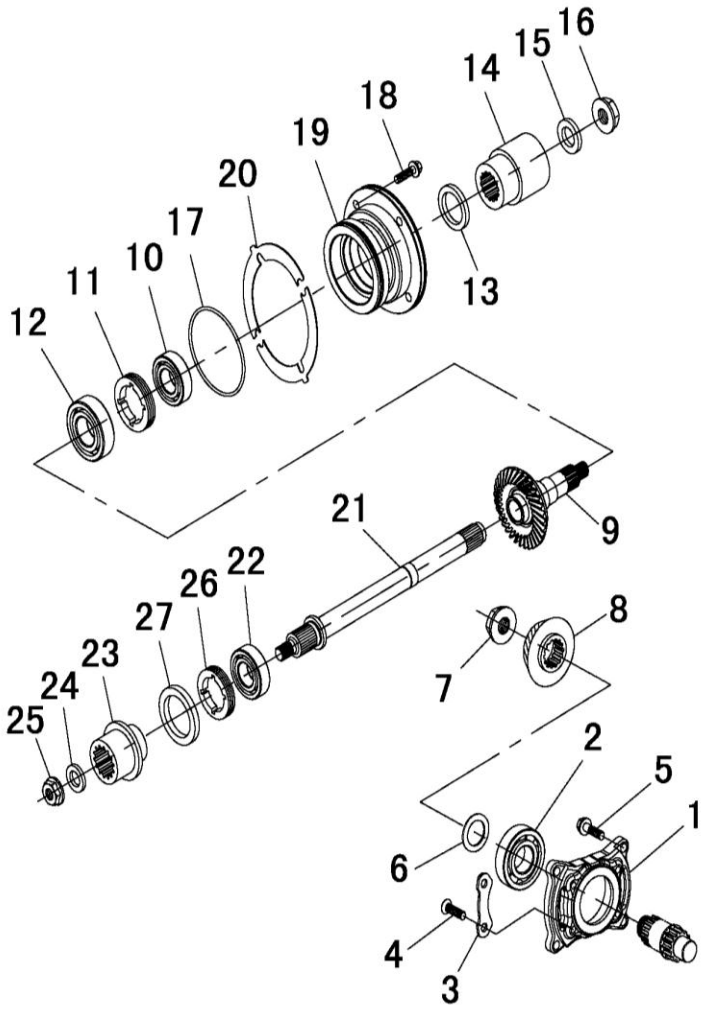


| No. | Part No. | Part name and Description | Q'ty | ReMark |
|---|---|---|---|---|
| 23 | 22191-004-0000 | Front Flange Coupling Assy | 1 | |
| 24 | 90607-003-0000 | Washer φ14.5×φ32×5 | 1 | |
| 25 | 90301-003-0000 | Nut M14×1.5 | 1 | GB/T 6187.2-2000 |
| 26 | 22159-003-0000 | Lock Ring M55 | 1 | |
| 27 | 91103-004-0000 | Fuel Seal 44×60×7 | 1 | |

## CLUTCH

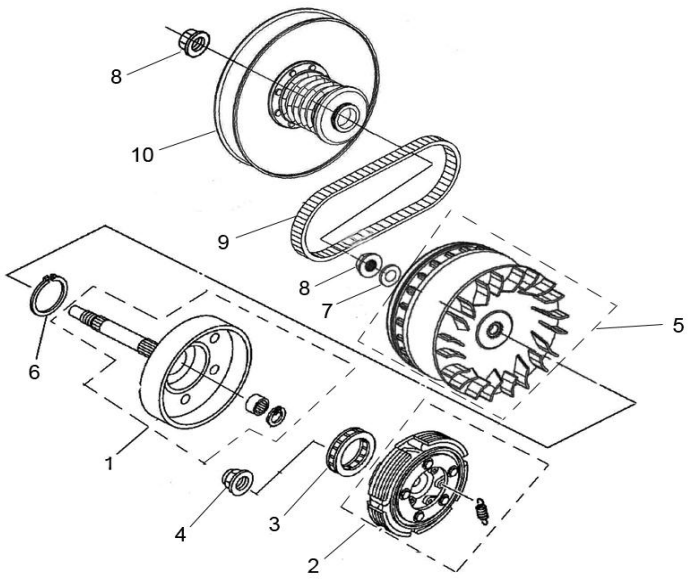


| No. | Part No. | Part name and Description | Q'ty | ReMark |
|---|---|---|---|---|
| 1 | 21210-004-0000 | Outer Clutch Cover | 1 | |
| 2 | 21230-004-0000 | Clutch Complete | 1 | |
| 3 | 21220-004-0000 | One Way Machine Comp | 1 | |
| 4 | 93202-2200-0060 | Nut M22×1 | 1 | |
| 5 | 21300-004-0000 | CVT Original Clutch (Driver) | 1 | |
| 6 | 93338-5200-0000 | Circlip 52 | 1 | |
| 7 | 90609-003-0000 | Washer 19.2×35×3.2 | 1 | |
| 8 | 93202-1600-0060 | Nut M16×1 | 2 | GB/T 6177.2-2000 |
| 9 | 25300-004-0000 | Belt 911.5-31.5-28 | 1 | |
| 10 | 21400-004-0000 | CVT Hypo Clutch (Driven) | 1 | |

## SHIFT CAM FORK

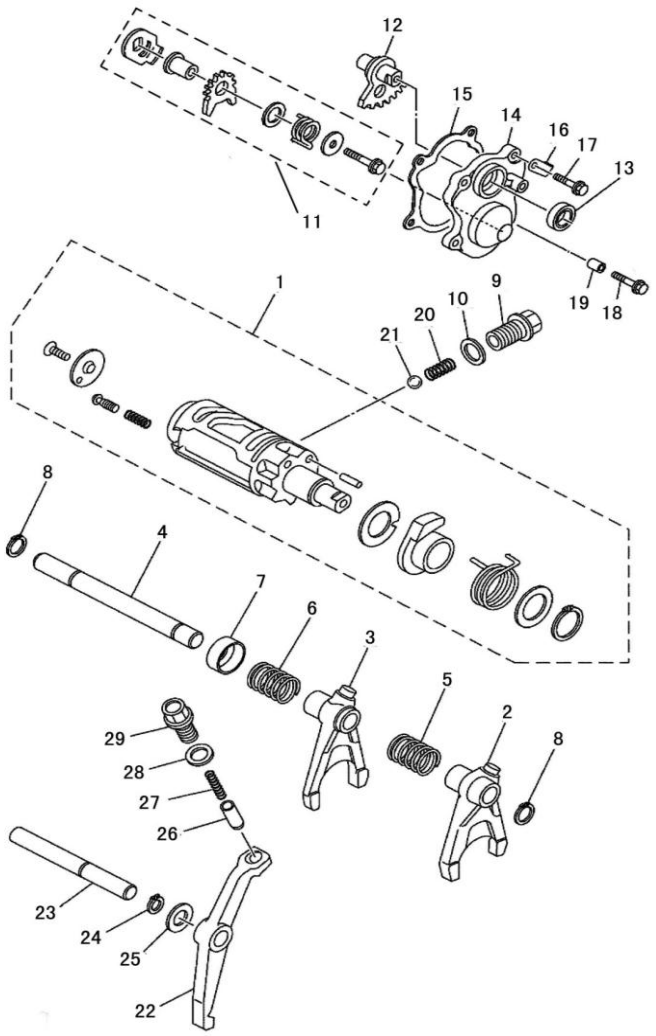


| No. | Part No. | Part name and Description | Q'ty | ReMark |
|---|---|---|---|---|
| 1 | 23200-004-0000 | Shift Drum Assy | 1 | |
| 2 | 23101-004-0000 | R Gear Fork | 1 | |
| 3 | 23102-004-0000 | H,L Gear Fork | 1 | |
| 4 | 22232-004-0000 | Gear Shifter Shaft | 1 | |
| 5 | 23107-004-0000 | Spring,R Gear | 1 | |
| 6 | 23105-004-0000 | Spring,H,L Gear | 1 | |
| 7 | 93135-004-0000 | Cap, Spring | 1 | |
| 8 | 93338-1200-0000 | Circlip φ12 | 2 | GB/T 894.1-1986 |
| 9 | 23304-003-0000 | Bolt M14×1.5×21 | 1 | |
| 10 | 90617-004-0000 | Copper Washer 14×21×1 | 1 | |
| 11 | 23320-004-0000 | Fan-Shape Driven Gear | 1 | SAME AS 500 |
| 12 | 23330-004-0000 | Fan-Shape Driving Gear | 1 | SAME AS 500 |
| 13 | 91111-002-0000 | Oil Seal 15×25×5 | 1 | |
| 14 | 23311-004-0000 | Gear Rocker Side Cover | 1 | |
| 15 | 23312-004-0000 | Gear Rocker Side Cover Cushion | 1 | |
| 16 | 91602-004-0000 | Clamp Ⅱ | 1 | ATV |
| 17 | 93107-0602-0060 | Flange Bolt M6×20 | 3 | GB/T 16674-1996 |
| 18 | 93107-0603-0060 | Flange Bolt M6×30 | 1 | GB/T 16674-1996 |
| 19 | 90812-004-0000 | DOWEL PIN 8×12 | 1 | |
| 20 | 23303-003-0000 | Spring 24×1 | 1 | |
| 21 | 23302-002-0000 | Steel Ball Sφ9.5 | 1 | |
| 22 | 43602-004-0000 | Parking Arm | 1 | SAME AS 500 |
| 23 | 43601-004-0000 | Parking Arm Shaft | 1 | SAME AS 500 |
| 24 | 93338-1200-0000 | Circlip 12 | 1 | SAME AS 500 |
| 25 | 90608-004-0000 | Washer 12.3×20×1 | 1 | SAME AS 500 |
| 26 | 43612-004-0000 | Parking Pin | 1 | 不可领 |

## SHIFT CAM FORK

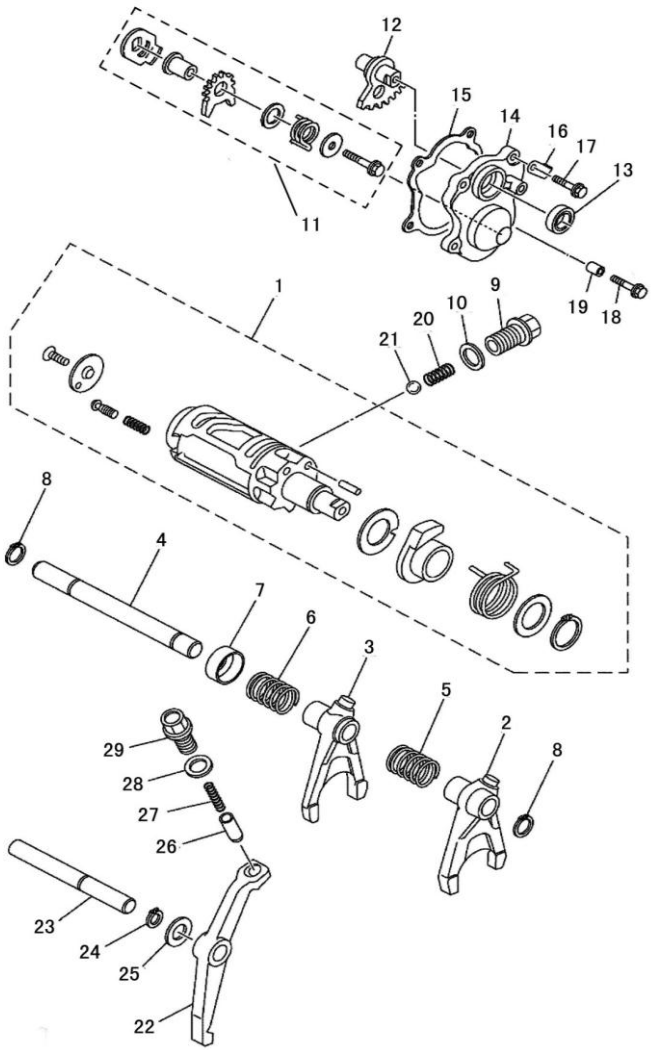


| No. | Part No. | Part name and Description | Q'ty | ReMark |
|---|---|---|---|---|
| 27 | 43613-004-0000 | Spring | 1 | 不可领 |
| 28 | 90622-004-0000 | WASHER 14×20×1.5 | 1 | |
| 29 | 43611-004-0000 | Parking Bolt | 1 | SAME AS 500 |
| | | | | |
| | | | | |
| | | | | |
| | | | | |
| | | | | |
| | | | | |
| | | | | |
| | | | | |
| | | | | |
| | | | | |
| | | | | |
| | | | | |
| | | | | |
| | | | | |
| | | | | |
| | | | | |
| | | | | |
| | | | | |
| | | | | |
| | | | | |

## OIL PUMP

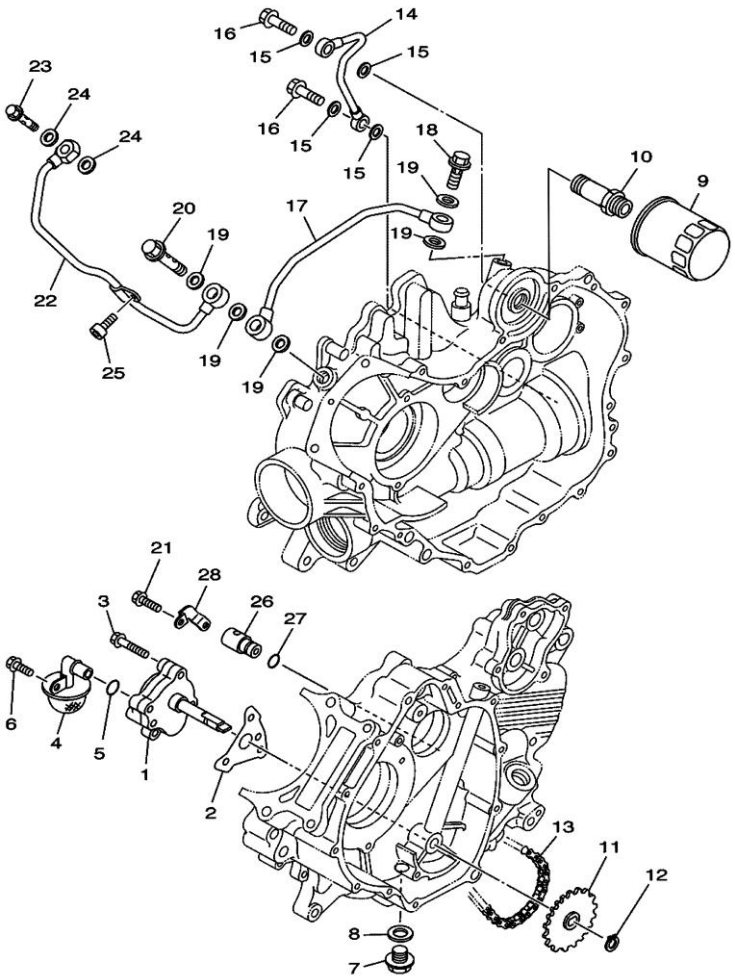


| No. | Part No. | Part name and Description | Q'ty | ReMark |
|---|---|---|---|---|
| 1 | 15100-004-0000 | Oil Pump Comp | 1 | |
| 2 | 15101-004-0000 | Paper Gasket, Oil Pump | 1 | |
| 3 | 93107-0604-0060 | Flange Bolt M6×40 | 3 | |
| 4 | 15300-004-0000 | Oil Filter Net Comp | 1 | |
| 5 | 91206-002-0000 | O-Ring 14×2.3 | 1 | |
| 6 | 93107-0601-4060 | Flange Bolt M6×14 | 1 | |
| 7 | 93004-002-0000 | Screw M14×1.5×16 | 1 | |
| 8 | 90622-004-0000 | Alu. Washer φ14×φ20×1.5 | 1 | |
| 9 | 15200-003-0000 | Oil Filter Comp | 1 | |
| 10 | 15201-003-0000 | Connecting Head, Filter | 1 | |
| 11 | 15161-004-0000 | Sprocket Driven | 1 | |
| 12 | 93338-1100-0000 | Circlip φ11 | 1 | |
| 13 | 15203-004-0000 | Chain 04CH-70,Oil Pump | 1 | |
| 14 | 15301-004-0000 | Pipe Delivery I | 1 | |
| 15 | 90613-004-0000 | WASHER ϕ8× ϕ15×2 | 4 | |
| 16 | 93011-004-0000 | Bolt M8×25 | 2 | |
| 17 | 15302-004-0000 | Pipe Delivery Ⅱ | 1 | |
| 18 | 93013-004-0000 | Bolt M14×1.5×28 | 1 | |
| 19 | 90612-004-0000 | Alu. Washer φ14×φ22×1.5 | 2 | |
| 20 | 93014-004-0000 | Bolt M14×1.5×50 | 1 | |
| 21 | 93107-0601-4060 | Flange Bolt M6×14 | 2 | |
| 22 | 15303-004-0000 | Pipe Delivery III | 1 | |
| 23 | 93012-004-0000 | Bolt M10×1.25×30 | 1 | |
| 24 | 90614-004-0000 | Alu. Washer φ10×φ16×1.2 | 2 | |
| 25 | 93432-0601-2060 | Inner Hexangular Screw M6×12 | 1 | |
| 26 | 15360-004-0000 | Relief Valve Comp | 1 | |

## OIL PUMP

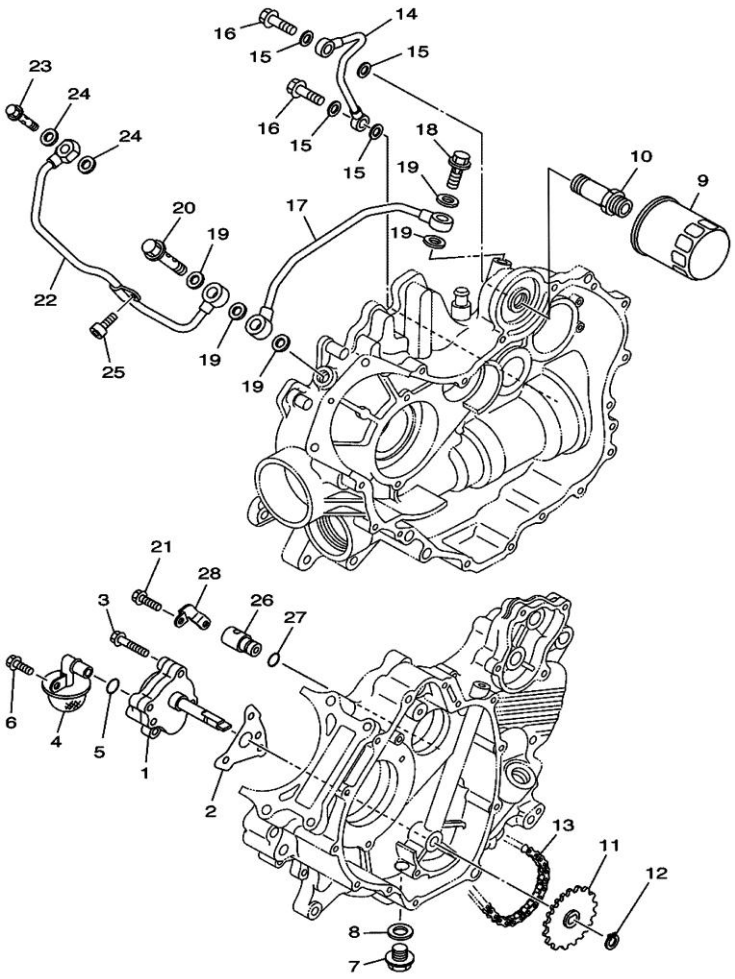


| No. | Part No. | Part name and Description | Q'ty | ReMark |
|---|---|---|---|---|
| 27 | 91211-004-0000 | O-Ring 10×2.45 | 1 | |
| 28 | 93134-004-0000 | Plate,Relief Valve | 1 | |

## STARTER

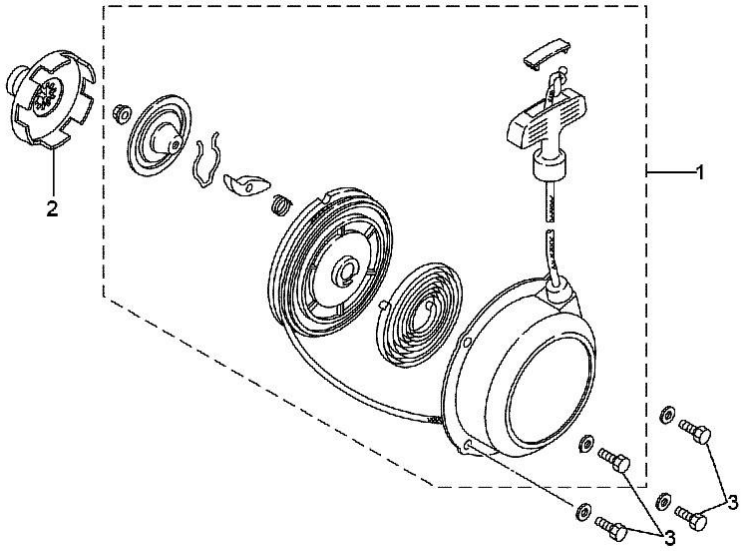


| No. | Part No. | Part name and Description | Q'ty | ReMark |
|---|---|---|---|---|
| 1 | 24410-003-0000 | Pulley Starter | 1 | |
| 2 | 24400-003-0000 | Starter Assy | 1 | |
| 3 | 93146-0601-4060 | Bolt M6×14 | 4 | |
| | | | | |
| | | | | |
| | | | | |
| | | | | |
| | | | | |
| | | | | |
| | | | | |
| | | | | |
| | | | | |
| | | | | |
| | | | | |
| | | | | |
| | | | | |
| | | | | |
| | | | | |
| | | | | |
| | | | | |
| | | | | |
| | | | | |

## Electric starter system

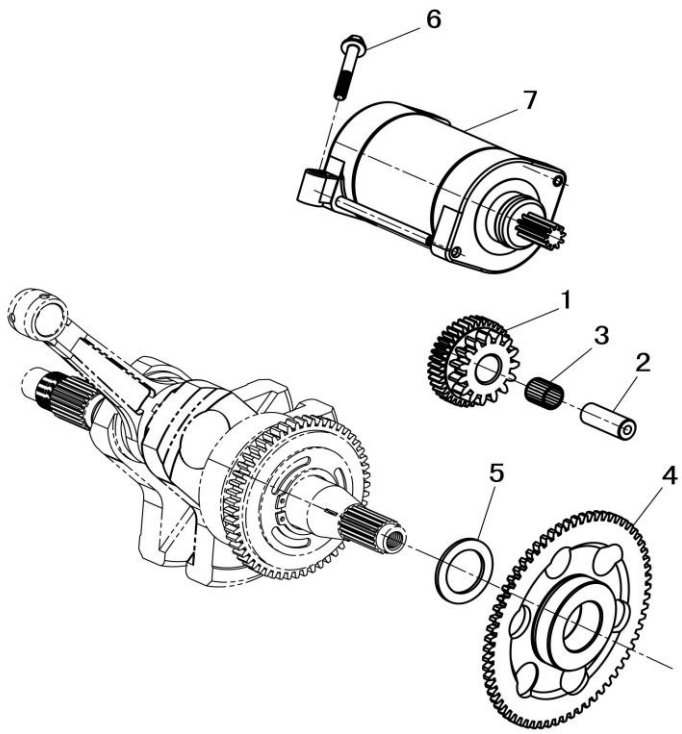


| No. | Part No. | Part name and Description | Q'ty | ReMark |
|---|---|---|---|---|
| 1 | 31220-004-0000 | Pair Gearwheel | 1 | |
| 2 | 31230-004-0000 | Pair Gearwheel Shaft | 1 | |
| 3 | 31261-004-0000 | Needle Bearing KBK121618 | 1 | |
| 4 | 31240-004-0000 | Disk Gear | 1 | |
| 5 | 90633-002-0000 | Washer 25.3×39×1 | 1 | |
| 6 | 93107-0603-0060 | Flange Bolt M6×30 | 2 | |
| 7 | 31200-004-0000 | Motor Assy / ATV | 1 | |

## GENERATOR

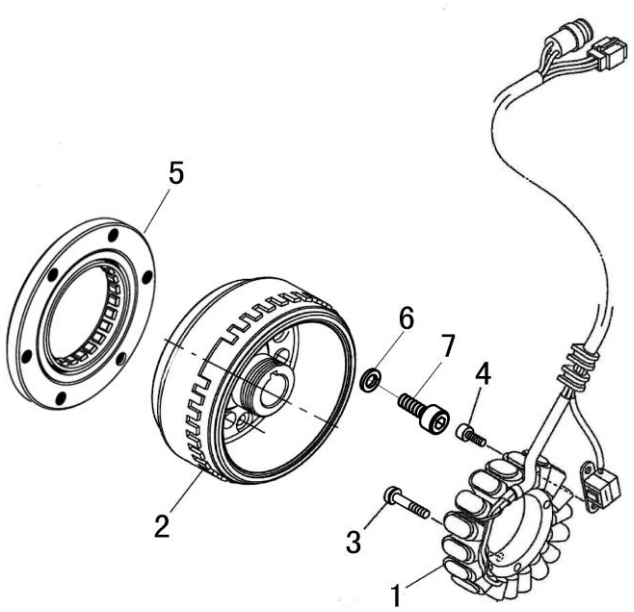


| No. | Part No. | Part name and Description | Q'ty | ReMark |
|---|---|---|---|---|
| 1 | 31120-004C-0000 | Stator Comp | 1 | |
| 2 | 31110-004C-0000 | Rotor Comp | 1 | |
| 3 | 93475-0603-0060 | cross recessed pan head assy screw M6×30 | 3 | |
| 4 | 93432-0501-2060 | Inner Hexangular Screw M5×12 | 2 | |
| 5 | 31250-004-0000 | Starter One-Way Comp | 1 | |
| 6 | 93315-0800-0000 | Spring Washer8 | 6 | |
| 7 | 93432-0801-6060 | Inner Hexangular Screw M8×16 | 6 | |

## WATER PUMP

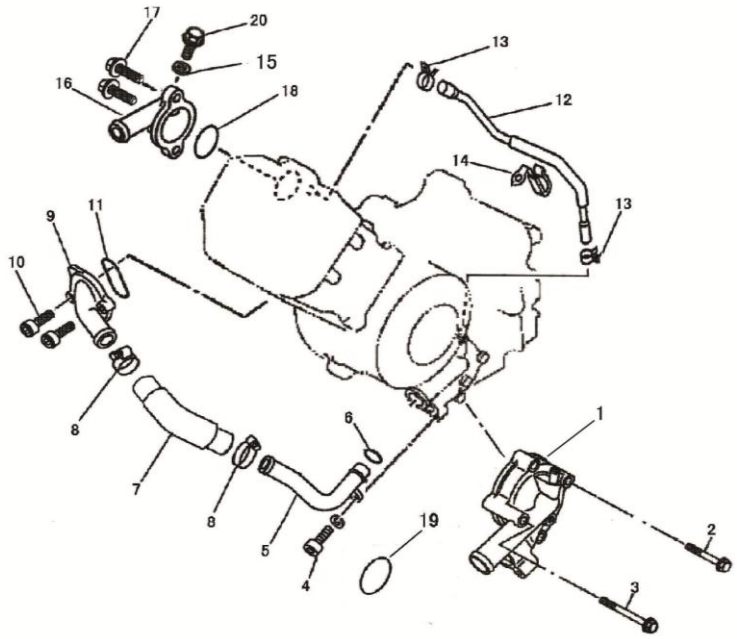


| No. | Part No. | Part name and Description | Q'ty | ReMark |
|---|---|---|---|---|
| 1 | 19700-004-0000 | Water Pump Comp | 1 | |
| 2 | 93107-0604-5060 | Flange Bolt M6×45 | 1 | |
| 3 | 93107-0606-5060 | Flange Bolt M6×65 | 1 | |
| 4 | 93107-0601-6060 | Flange Bolt M6×16 | 1 | |
| 5 | 19272-004-0000 | Water Pipe II | 1 | |
| 6 | 91213-004-0000 | O-Ring 20.7×2.6 | 1 | |
| 7 | 19273-004-0000 | Water Pipe III | 1 | |
| 8 | 90405-004-0000 | Water Pipe Clip20-32 | 2 | |
| 9 | 19210-004-0000 | Cylinder Inlet Water Joint | 1 | |
| 10 | 93432-0602-0060 | Inner Hexangular Screw M6×20 | 2 | |
| 11 | 91214-004-0000 | O-Ring 33.4×2.4 | 1 | |
| 12 | 19271-004-0000 | Water Pipe I | 1 | |
| 13 | 90404-004-0001 | Clamp Ⅱ (φ10) | 2 | |
| 14 | 91502-004-0000 | Pipe Clip II | 1 | |
| 15 | 90601-002-0000 | Alu. Washer 6×13×1.5 | 1 | |
| 16 | 19410-004-0000 | Thermostat Cover | 1 | |
| 17 | 93107-0602-0060 | Flange Bolt M6×20 | 2 | |
| 18 | 91219-004-0000 | Thermostat Cover O-ring | 1 | |
| 19 | 91212-004-0000 | O-Ring 34.2×2.5 | 1 | |
| 20 | 93107-0601-2060 | Flange Bolt M6×12 | 1 | |
| | | | | |
| | | | | |
| | | | | |
| | | | | |
| | | | | |
| | | | | |
| | | | | |