HS500ATV-4 (C) (E-mark)2013

FRAME BODY PART

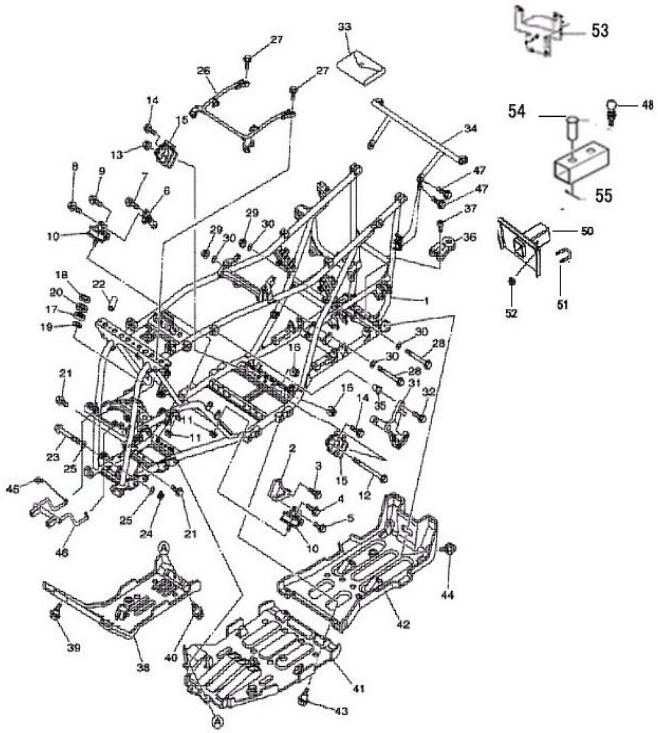

No.	Part No.	Part Name And Standard	Q'TY	REMARK
1	5110A-107-0100	Frame joint parts	1	E-mark
2	54304-107-0000	Suspension support, engine front (L)	1	
3	B05-M8×20-57	Hexagon flange bolt M8×20	2	
4	B05-M6×16-57	Hexagon flange bolt M6×16	1	
5	B05-M8×20-57	Hexagon flange bolt M8×20	1	
6	54305-107-0000	Suspension support, engine front (R)	1	
7	B05-M8×20-57	Hexagon flange bolt M8×20	2	
8	B05-M6×16-57	Hexagon flange bolt M6×16	1	
9	B05-M8×16-57	Hexagon flange bolt M8×16	1	
10	5430A-115-0000	Suspension support, engine front	2	
11	B10-M10×1.25-27	Hexagon flange self-lock nuts M10×1.25	2	
12	B06-M10×1.25×170-57	Hexagon flange bolt M10×1.25×170	1	
13	B10-M10×1.25-27	Hexagon flange self-lock nuts M10×1.25	1	
14	B05-M6×16-57	Hexagon flange bolt M6×16	2	
15	5431A-115-0000	Suspension support, engine rear	2	
16	B10-M10×1.25-27	Hexagon flange self-lock nuts (with metallic insert) M10×1.25	2	
17	92812-103-0000	Steering column bearing 6203-2Z	1	
18	91101-103-0000	Oil seal24×44×7	1	24×44×7
19	91102-103-0000	Oil seal24×36×8	1	24×36×8
20	62122-107-0000	Nut cap	1	
21	B06-M10×1.25×30-57	Hexagon flange bolt M10×1.25×30	2	
22	90662-107D-0000	BUSH φ9×φ30×30.5	2	
23	B06-M10×1.25×115-57	Hexagon flange bolt M10×1.25×115	1	

FRAME BODY PART

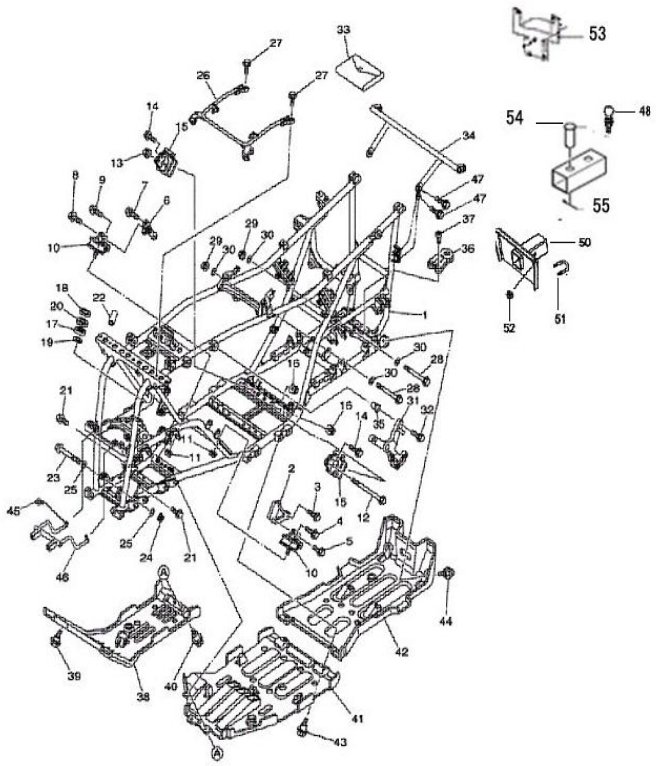

No.	Part No.	Part Name And Standard	Q'TY	REMARK
24	B10-M10×1.25-27	Hexagon flange self-lock nuts (with metallic insert) M10×1.25	1	
25	90606-102-0900	Washer φ10×φ20×1	2	
26	1900A-107D-0000	Water-tank brackter assy Ⅰ	1	
27	B05-M6×12-57	Hexagon flange bolt M6×12	2	
28	B06-M10×1.25×115-57	Hexagon flange bolt M10×1.25×115	2	
29	B10-M10×1.25-27	Hexagon flange self-lock nuts (with metallic insert) M10×1.25	2	
30	90606-102-0900	Washer φ10×φ20×1	4	
31	23525-107-0000	Gearshift bracket assy	1	
32	B05-M8×45-57	Hexagon flange bolt M8×45	2	
33	89100-115-0000	Tool kit	1	
34	54253-107D-0000	Rear mudguard bracket Ⅱ	1	
35	90642-107-0000	BUSH φ8.5×φ20×20	2	
36	72309-107-0000	Hitch joint A	1	Kort
	72321-107-0000	Hitch joint B	1	Lång
37	B15-M10×1.25×25-37	Six angle bolt M10×1.25×25	2	
38	83701-107-0000	Front lower protective plate	1	
39	90144-107-0000	Hexagon step bolt m6×16-φ10×4	2	
40	90144-107-0000	Hexagon step bolt m6×16-φ10×4	2	
41	83702-107-0000	Middle lower protective plate	1	
42	83703-107-0000	Rear lower protective plate	1	
43	90144-107-0000	Hexagon step bolt m6×16-φ10×4	4	
44	90144-107-0000	Hexagon step bolt m6×16-φ10×4	2	
45	B05-M6×16-57	Hexagon flange bolt M6×16	2	
46	1901A-107D-0000	Water-tank brackter assy Ⅱ	1	C
47	B05-M6×16-57	Hexagon flange bolt M6×16	4	

FRAME BODY PART

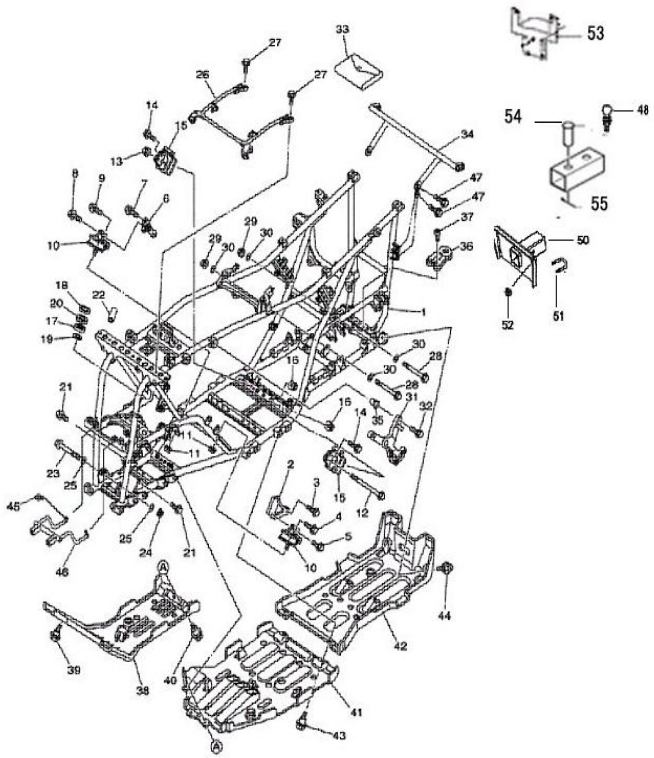

No.	Part No.	Part Name And Standard	Q'TY	REMARK
48	72310-103-0000	Hitch bar assy	1	
49	72302-115-0000	Hitch bar joint Ⅱ	1	
50	7232A-107-0000	Hitch bar joint C	1	
51	73252-107-0100	U type bolt M8	2	
52	90413-110-0000	NutM8	4	
53	54237-115-0000	License Bracket	1	
54	90694-107-0010	Hitch Bar Connector Pin	1	
55	B12-2×25-W7	Cotter pin 2×25	1	
56	B14-3.2×7-53	Rivets φ3.2 × 7	1	
57	89102-116-0000	Shock absorber adjustable wrenches	1	

ELECTRICAL PART

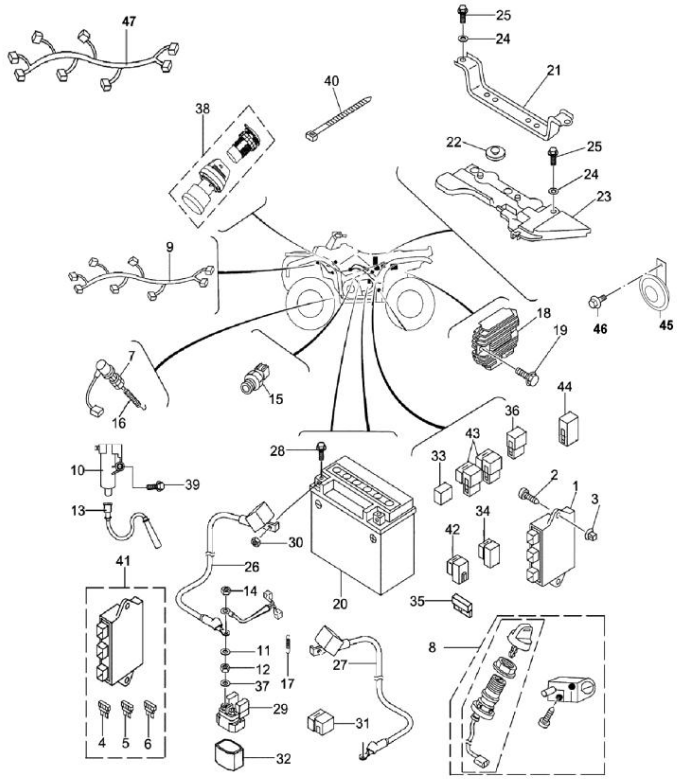

No.	Part No.	Part Name And Standard	Q'TY	REMARK
1	39200-116-1000	ECU Controller assy	1	
2	B18-ST6×20C-W7	Cross recessed plate head screw ST6×20	1	
3	90436-107-0000	Plastic nut	1	
4	37701-107F-0000	Fuse(5A)	2	
5	37702-107F-0000	Fuse(10A)	3	
6	37703-107F-0000	Fuse(15A)	4	
7	37630-107-0000	Lamp switch, rear break	1	
8	37200-107-0100	Ignition switch assy	1	
9	34100-107F-0000	EFI cable assy	1	
10	33100-116-0000	Ignition coil	1	
11	37716-115-0000	Spring washer -6	4	
12	B30-M6-22	Hexagon nut M6	2	
13	33120-113E-0000	Ignition coil cable	1	
14	B08-M6-22	Hexagon nut M6	2	
15	19206-107-0000	Water temperature sensor	1	
16	95081-107-0013	Tension spring I	1	
17	37714-107-0000	Fuse(30A)	1	
18	32100-115-0000	Voltage regulator	1	
19	B05-M6×30-57	Hexagon flange bolt M6×25	1	
20	32200-107-0000	Battery comp.12V21Ah	1	
21	32234-107-0000	Press plate, battery	1	
22	94142-103-0004	Cylindrical rubber cushion Ⅶ	2	
23	32231-107-0000	Battery bracket	1	
24	B03-6-B7	Washer φ6×φ18×1.5	3	
25	B05-M6×16-57	Hexagon flange bolt M6×16	3	
26	37713-107-0000	Positive cable, battery	1	

ELECTRICAL PART

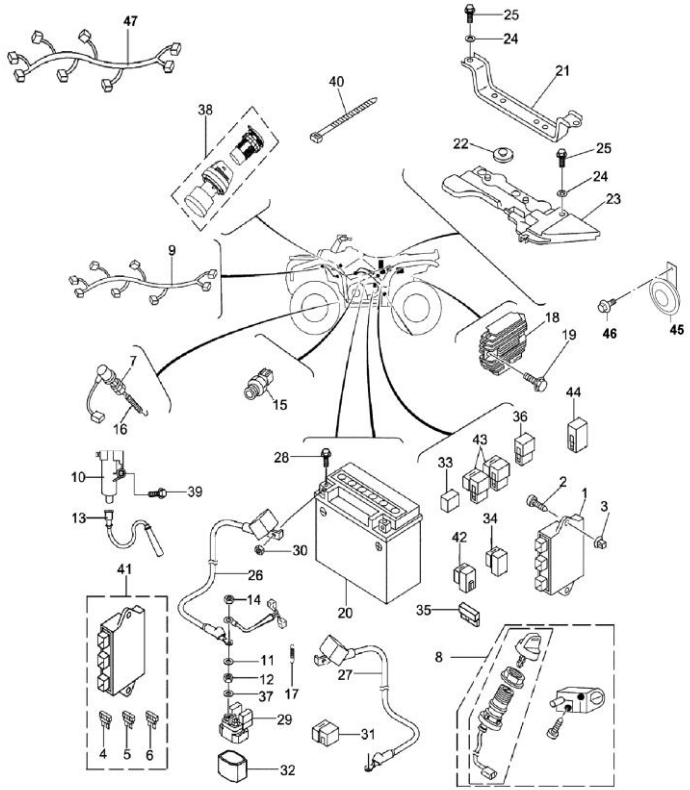

No.	Part No.	Part Name And Standard	Q'TY	REMARK
27	34160-107-0000	Negative cable, battery	1	
28	32237-107-0000	Bolt M6×16, battery	2	
29	37710-115-0000	Starting relay	1	
30	32239-107-0000	Nut, battery	2	
31	36571-107-0000	Rubber cover, fuse box	1	
32	37717-115-0000	Out rubber cover,starting relay	1	
33	94013-115-0000	Rubber cover, auxiliary relay	2	
34	94014-115-0000	Rubber cover, breaker	1	
35	36570-107-0000	Fuse box (with fuse)	1	
36	37741-107-0000	Auxiliary relay cover	2	
37	90691-102-0010	Washer φ6×φ12×1	2	
38	32310-107-0000	Auxiliary DC plug assy	1	
39	B05-M6×40-57	Hexagon flange bolt M6×40	2	
40	95411-115-0002	Cable Ties Ⅳ（L=300）	20	
41	37700-115H-0000	Relay assy	1	
42	37760-107-0000	Breaker assy	1	
43	37750-107-0000	Auxiliary relay	2	
44	37850-102-0000	Emergency Lighting Controller	1	
45	34500-115-0000	Horn	2	
46	B05-M6×12-57	Hexagon Flange Bolt M6×10	2	
47	51301-115-0000	Battery cushion '50 × 35 × 5	4	
48	51301-112-0000	Battery cushion pad 50 × 30 × 10	4	
49	54728-107F-0000	Start relay lug	1	
50	B17-M5×12-W7	Phillips head screw M5 × 12	2	
51	51303-107-0000	Clamp		

RADIATOR PART

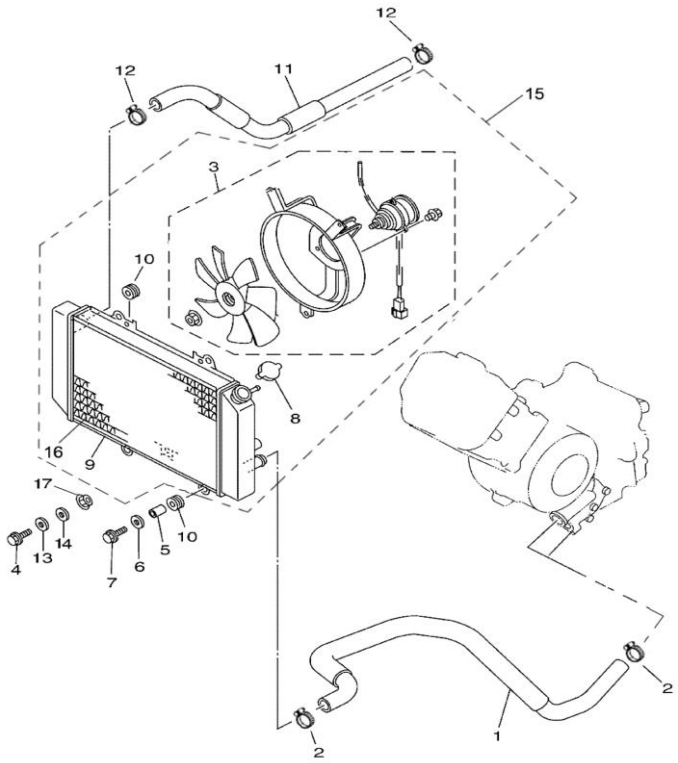

No.	Part No.	Part Name And Standard	Q'TY	REMARK
1	19003-107-0000	Water pipe C	1	
2	90742-102-0000	Screw hoop φ20-32	2	
3	19205-107-0000	Water-tank fan assy	1	
4	B07-M6×16-5A	Hexagon flange bolt M6×16	4	
5	19207-107-0000	Bush	2	
6	B03-6-B7	Washer φ6×φ18×1.5	2	
7	B05-M6×20-57	Hexagon flange bolt M6×20	2	
8	19203-107-0000	Water tank cover assy	1	
9	19202-107-0000	Water tank assy	1	
10	19224-102-0000	H style rubber ring	4	
11	19004-107-0000	Water pipe D	1	
12	90742-102-0000	Screw hoop φ20-32	2	
13	B01-6-BA	Spring washer -6	4	
14	B28-6-BA	Washer φ6×φ16×1.5	4	
15	19200-107-0000	Cooler, water-tank	1	
16	19204-107-0000	Water cooling radiator cover	1	
17	B22-M6-2A	Hexagon flange nut M6	4	

STEERING BAR PART

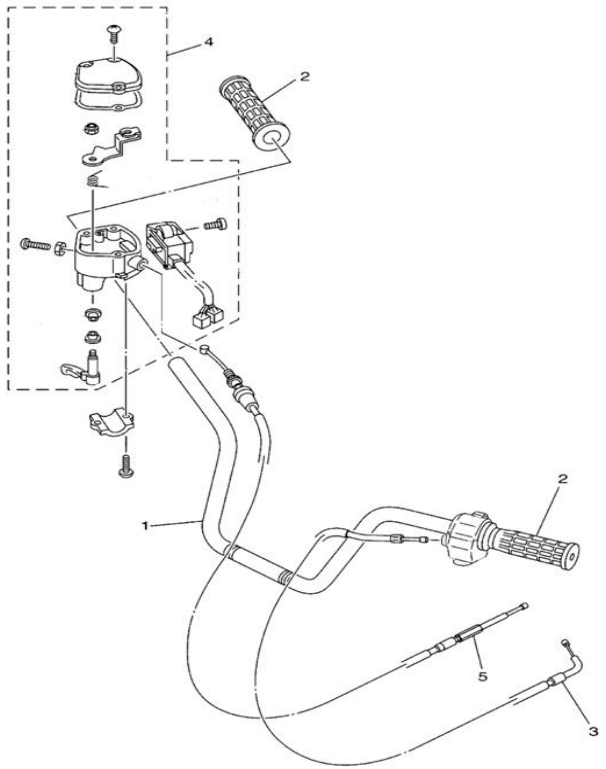

No.	Part No.	Part Name And Standard	Q'TY	REMARK
1	61101-107-0000	Handlebar pipe	1	
2	61107-107-0000	Handlebar rubber sleeve	2	
3	61020-107-0000	Cable assy	1	Förgasar model
4	61070-107-0000	Accelerator assy	1	
5	61030-107F-0000	Accelerator cable	1	EFI
	61030-107-0000	Accelerator cable	1	Förgasar model

LEFT HANDLE BAR

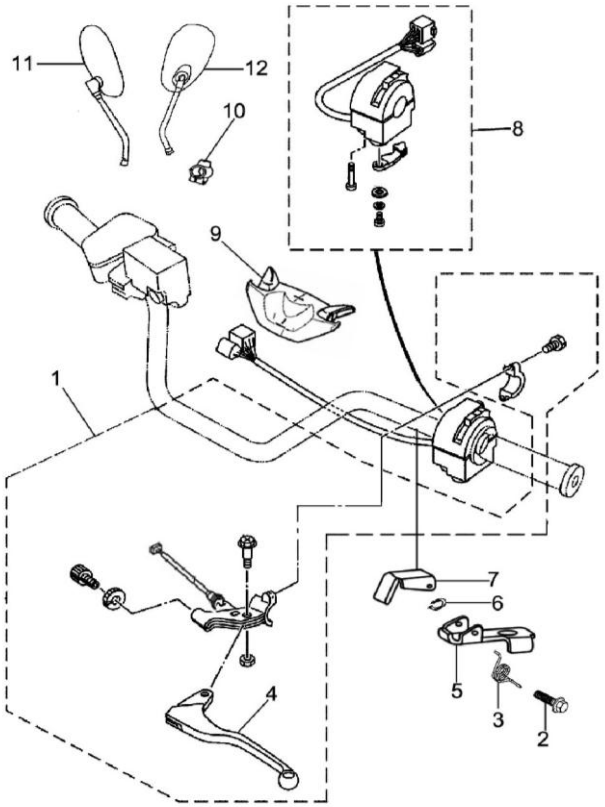

No.	Part No.	Part Name And Standard	Q'TY	REMARK
1	61040-107-0000	Lever assy,front brake	1	
2	43332-107-0000	Stop pin,Stop Brake	1	
3	43333-107-0000	Torsion spring ,Stop Brake	1	
4	61042-107-0000	Press plate,lever assy,front brake	1	
5	43335-107-0000	Front of Stop Clip,Stop Brake	1	
6	43331-107-0000	Stop pin block circle,Stop Brake	1	
7	43334-107-0000	Stop clip,stop brake	1	
8	37400-107-0000	Left switch assy	1	
9	61108-107-0000	Hangle shield	1	
10	89231-107-0000	Mounting Bracket,Rear Mirror	1	
11	89220-107-0000	Rear Right Mirror (For E-mark)	1	
12	89210-107-0000	Rear Left Mirror (For E-mark)	1	

STEERING STEM PART

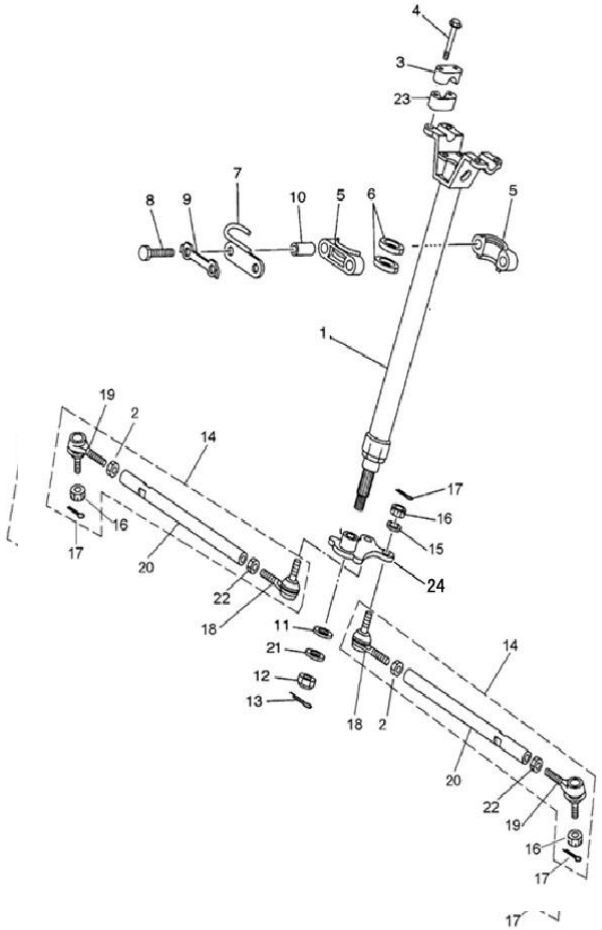

No.	Part No.	Part Name And Standard	Q'TY	REMARK
1	62130-107-0100	Steering stem assy	1	
2	62515-107-0000	Hexagon nut (L)	2	
3	61130-103-0000	Upper fix bracket,steering stem	2	
4	B05-M8×55-57	Hexagon flang bolt M8×55	4	
5	62142-102-0000	Supporting block,steering stem	2	
6	62148-102-0000	Seal gasket,steering stem	2	
7	62141-107-0000	Stand bracket,stem steering	1	
8	B07-M8×60-57	Hexagon bolt M8×60	2	
9	53252-102-0000	Stop drive washer	1	
10	90693-102-0024	Bush φ9×φ13.5×43.5	2	
11	90691-102-0003	Washer φ15×φ28×2	1	
12	B11-M14×1.5-27	Slotted nuts M14×1.5	1	
13	B12-2.5×40-W7	Cotter pin 2.5×40	1	
14	62510-107-0000	Shift straight rod assy	2	
15	B01-10-B7	Spring washer -10	2	
16	B11-M10×1.25-22	Hexagon bolt M10×1.25	4	
17	B12-2.5×40-W7	Cotter pin 2.5×40	4	
18	62511-107-0000	Straight rod in gimbal	2	
19	62512-107-0000	Straight rod out gimbal	2	
20	62513-107-0000	Shift straight rod	2	
21	B01-14-B7	Spring washer -14	1	
22	62514-107-0000	Hexagon nut	2	
23	61132-103-0100	Lower fix bracket,steering stem	2	
24	6214A-107-0000	Rocker, steering stem	1	
25	90691-112-0005	Flat washer φ13 × φ24 × 2	2	

AIR FILTER PART

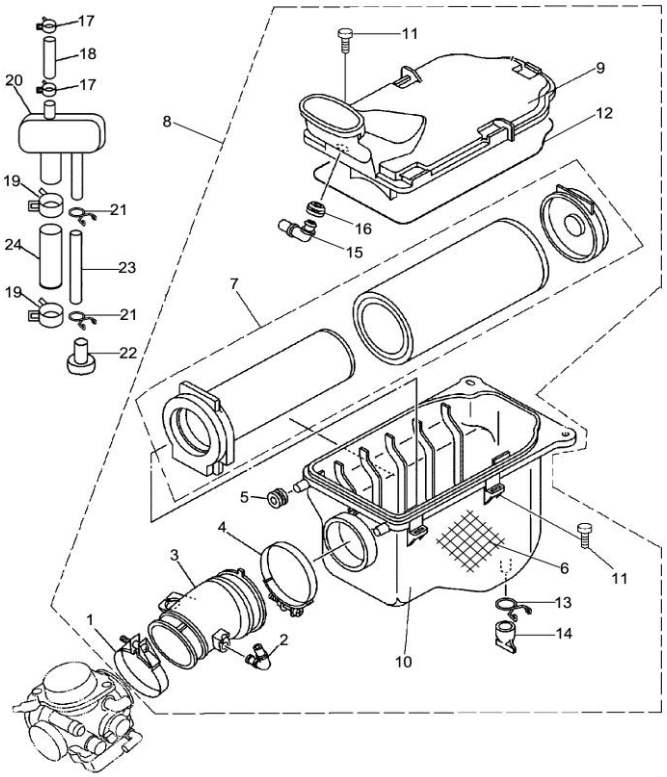

No.	Part No.	Part Name And Standard	Q'TY	REMARK
1	17105-115-0000	Screw hoopφ60-80	1	
2	17132-107-0000	Pipe joint	1	
3	17106-107F-0000	Air-out pipe	1	
4	1716A-115-0000	Connector hoop assy Ⅳ	1	
5	94046-107-0000	H style rubber ring Ⅵ	2	
6	95307-107-0000	Heat insulation paper Ⅶ	1	
7	17104-107-0000	Air filter element	1	
8	17100-104F-0000	Air filter assy	1	
9	17102-107-0000	Air filter cover	1	
10	17101-107-0000	Air filter shell	1	
11	B19-M5×12-22	Cross plate head tapping screw M5×12	5	
12	17107-107-0000	Seal ring	1	
13	17108-107-0000	Wire clip	1	
14	17133-107-0000	Leakage pipe plug	1	
15	17132-107-0000	Pipe joint	1	
16	17135-107-0000	H style rubber ring	1	
17	90762-107-0000	Wire clip φ16	2	
18	18611-115-0000	Exhaust-out pipeφ11×φ15×100	1	
19	90727-115-0000	Clamp φ16	1	
20	17120-104-0000	Oil&air separator	1	
21	17124-104-0000	Clipφ12	2	
22	17125-115-0000	Block, used oil pipe	1	
23	17123-104-0000	Used oil collection pipe	1	
24	16574-107-0000	Rubber tube Ⅲφ10.5×φ16-S	1	
25	16516-107-0001	Shaped rubber tube Iφ11 × φ15	1	

MUFFLER PART

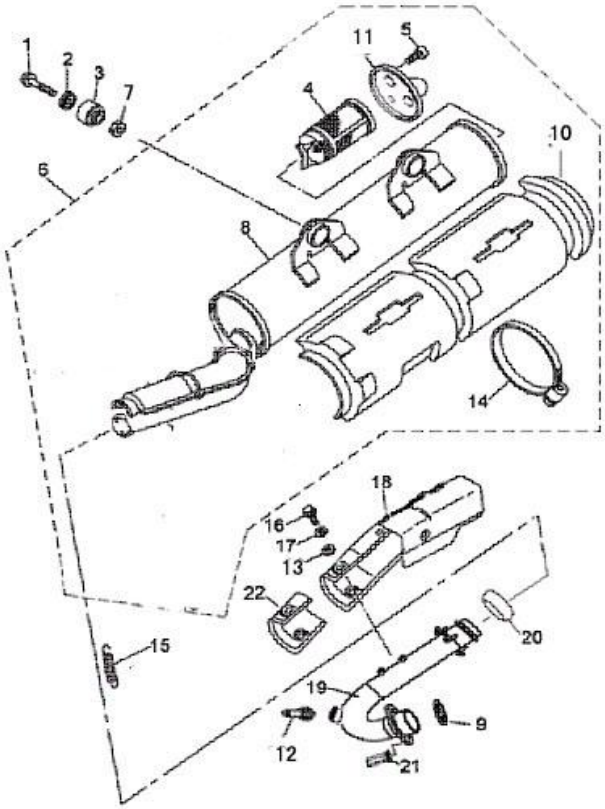

No.	Part No.	Part Name And Standard	Q'TY	REMARK
1	B05-M8×45-57	Hexagon flange bolt M8×45	2	
2	18008-107-0000	Muffler gasket	2	
3	18161-115-0000	Suspension bushings	2	
4	18171-115-0000	Tail tube assy	1	
5	B15-M6×20-30	Hexagon socket head bolt M6×20	3	
6	18100-107-0000	Muffler parts	1	
7	B22-M8-27	Hexagon flange nut M8	2	
8	1810A-107-0000	Muffler welded assembly	1	
9	18001-104C-0000	Exhaust pipe gasket	1	
10	17203-107-0000	Shield,muffler tube	1	
11	18172-107-0000	Tail pipe cover	1	
12	39160-116-0000	Oxgyen sensor assy	1	
13	B01-6-B0	Spring washer -6	6	
14	90751-107-0010	Hoop φ105-127	3	
15	95081-115-0005	Spring φ2.5×φ14.5×62	3	
16	B05-M6×16-50	Hexagon flange boltM6×16	6	
17	B03-6-B0	Washer φ6×φ12×1.5	6	
18	17204-107F-0000	Exhaust pipe shield Ⅰ	1	
19	18210-104F-0000	Exhaust pipe shield Ⅰ	1	
20	18006-115-0000	Muffler sealing boot	1	
21	90442-115-0003	Nut M8×32	2	
22	17205-107-0000	Exhaust pipe shield Ⅱ	1	
23	18200-104F-0000	Exhaust pipe Assy		

FRONT SUSPENSION PART

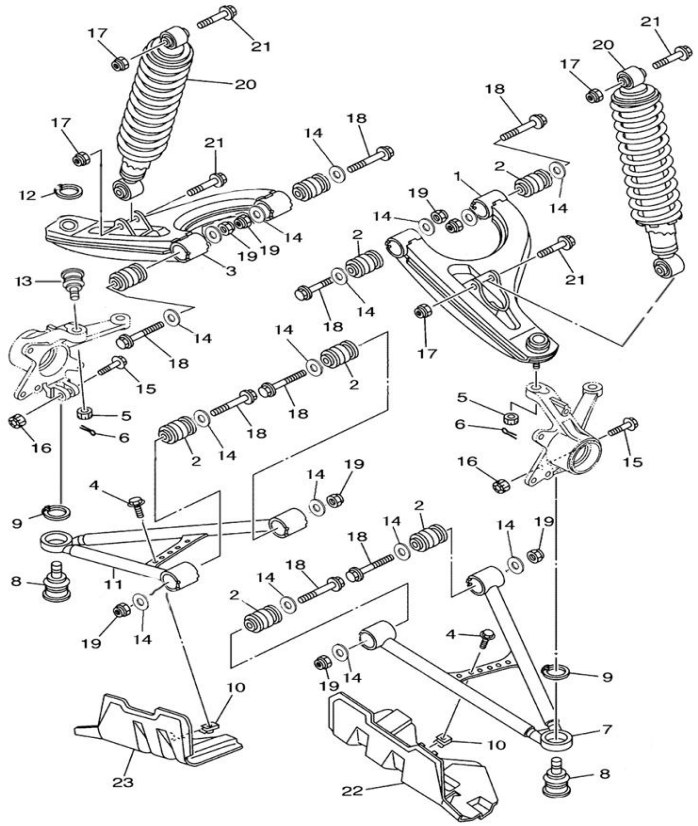

No.	Part No.	Part Name And Standard	Q'TY	REMARK
1	5710A-107-0000	Front-upper suspension (L)	1	
2	54842-107-0000	Middle part rubber, swing arm	8	
3	5711A-107-0000	Front-upper suspension (R)	1	
4	B05-M6×12-57	Hexagon flange bolt M6×12	2	
5	B11-M10×1.25-22	Hexagon bolt M10×1.25	2	
6	B12-2.5×40-W7	Cotter pin 2.5×40	2	
7	5712A-107-0000	Front-lower suspension (L)	1	
8	62420-107-0000	Universal joint b, swing arm	2	
9	B20-30-BB	Circlip d0=30	2	
10	90402-115-0000	Clip for bolt M6	2	
11	5713A-107-0000	Front-lower suspension (R)	1	
12	B20-30-BB	Circlip d0=30	2	
13	62410-107-0000	Universal joint a, swing arm	2	
14	54815-115-0000	Dust cover b	16	
15	B06-M10×1.25×40-57	Hexagon flange bolt M10×1.25×40	2	
16	B10-M10×1.25-27	Hexagon flange self-lock nuts (with metallic insert) M10	2	
17	B10-M10×1.25-27	Hexagon flange self-lock nuts (with metallic insert) M10	4	
18	B06-M10×1.25×70-57	Hexagon flange bolt M10×1.25×70	8	
19	B10-M10×1.25-27	Hexagon flange self-lock nuts (with metallic insert) M10	8	
20	52100-107-0000	Front shock absorber comp.	2	
21	B06-M10×1.25×50-57	Hexagon flange bolt M10×1.25×50	4	
22	82106-107-0000	Front-lower swing arm shield (R)	1	
23	82105-107-0000	Front-lower swing arm shield (L)	1	

REAR SUSPENSION

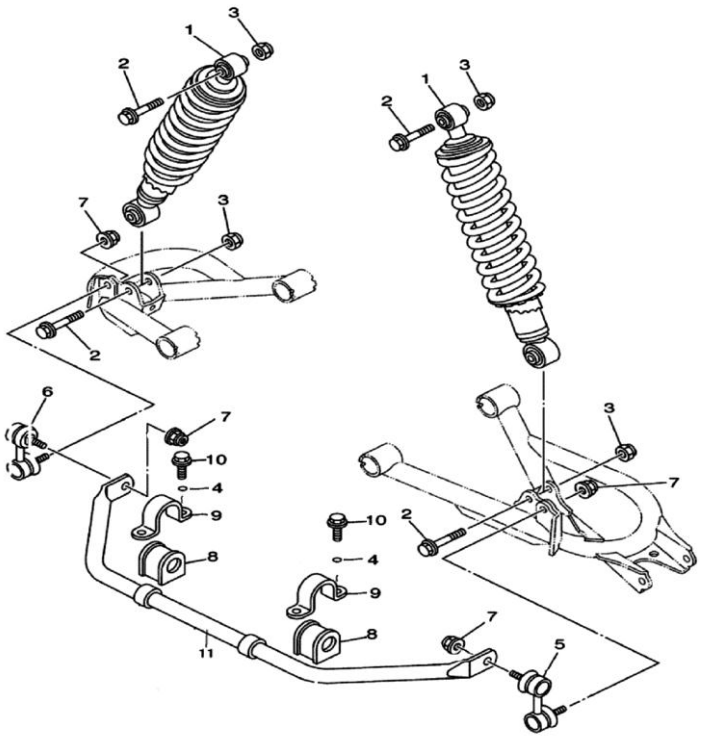

No.	Part No.	Part Name And Standard	Q'TY	REMARK
1	55100-107-0000	Rear shock absorber comp.	2	
2	B06-M10×1.25×50-57	Hexagon flange bolt M10×1.25×50	4	
3	B24-M10-27	Hexagon flange nut M10	4	
4	B01-8-B7	Spring washer -8	4	
5	57572-115-0000	Universal joint (R)	1	
6	57571-115-0000	Universal joint (L)	1	
7	B10-M10×1.25-27	Hexagon flange self-lock nuts (with metallic insert) M10	4	
8	94144-107-0002	U type rubber bush Ⅱ	2	
9	57561-107-0000	Press plate, balance level	2	
10	B05-M8×16-57	Hexagon flange bolt M8×16	4	
11	5756A-103C-0000	Balance level,rear suspension	1	

REAR SWING ARM

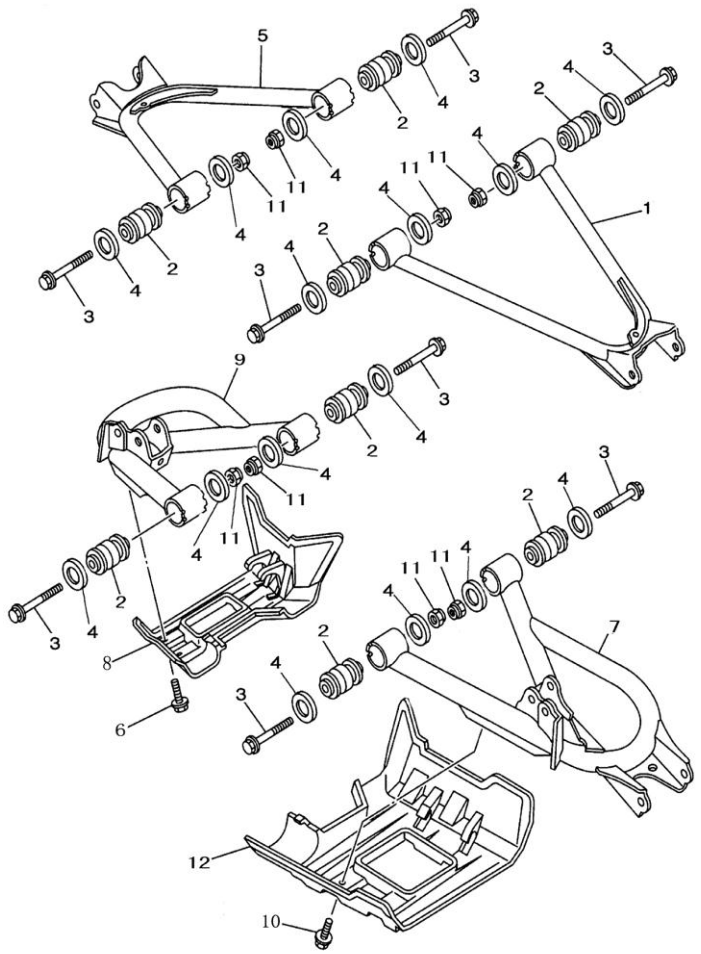

No.	Part No.	Part Name And Standard	Q'TY	REMARK
1	5720A-107-0000	Rear-upper suspension (L)	1	
2	54842-107-0000	Middle part rubber, swing arm	8	
3	B06-M10×1.25×70-57	Hexagon flange bolt M10×1.25×70	8	
4	54815-115-0000	Dust cover b	16	
5	5721A-107-0000	Rear-upper suspension (R)	1	
6	B05-M6×12-57	Hexagon flange bolt M6×12	2	
7	5722A-107-0000	Rear-lower suspension(L)	1	
8	82204-107-0000	Rear-lower swing arm shield (R)	1	
9	5723A-107-0000	Rear-lower suspension(R)	1	
10	B05-M6×12-57	Hexagon flange bolt M6×12	2	
11	B10-M10×1.25-27	Hexagon flange self-lock nuts (with metallic insert) M10	8	
12	82203-107-0000	Rear-lower swing arm shield (L)	1	

FRONT WHEEL PART

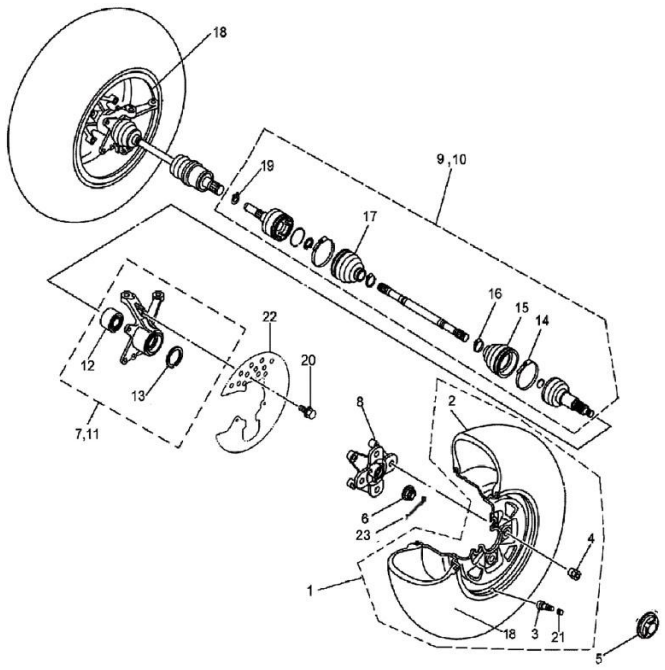

No.	Part No.	Part Name And Standard	Q'TY	REMARK
1	41100-107-0000	Front wheel assy	2	
2	41170-115-0200	Front tire	2	Se däck tabell 2
3	41275-115-0000	Valve cock	2	
4	90431-102-0000	Tapered nut M10	8	
5	83101-107-0000	Wheel decoration cover Z103	2	
6	47203-115-0000	Slotted nut m22×1.5	2	
7	62210-107-0000	Front steering knuckle assy (L).	1	
8	62310-107-0000	Mounting bracket for front hub	2	
9	47210-107-0000	Front constant velocity universal joint assy(L)	1	
10	47230-107-0000	Front constant velocity universal joint assy(R)	1	
11	62230-107-0000	Front steering knuckle assy(R).	1	
12	62258-107-0000	Bearing (Dac305532W)	1	
13	62201-107-0000	Inner Bushing	2	
14	47201-115-0000	Hoop a, dust proof shed	4	
15	47212-107-0000	Outer rubeer dust-proof boot C-1605	2	
16	47202-115-0000	Hoop b, dust proof shed	4	
17	47211-107-0000	Inner rubber dust-proof boot C-1610	2	
18	41120-107-0709	Front rim	2	
19	47213-115-0000	Circlip	2	
20	90529-103-0000	Cross large plate head screw M6×12	4	
21	41274-115-0000	Valve cock cover	2	
22	41112-107-0000	Shield, front brake pad	2	
23	B12-2.5×40-W7	Cotter pin 2.5×40	2	

FRONT CASE PART

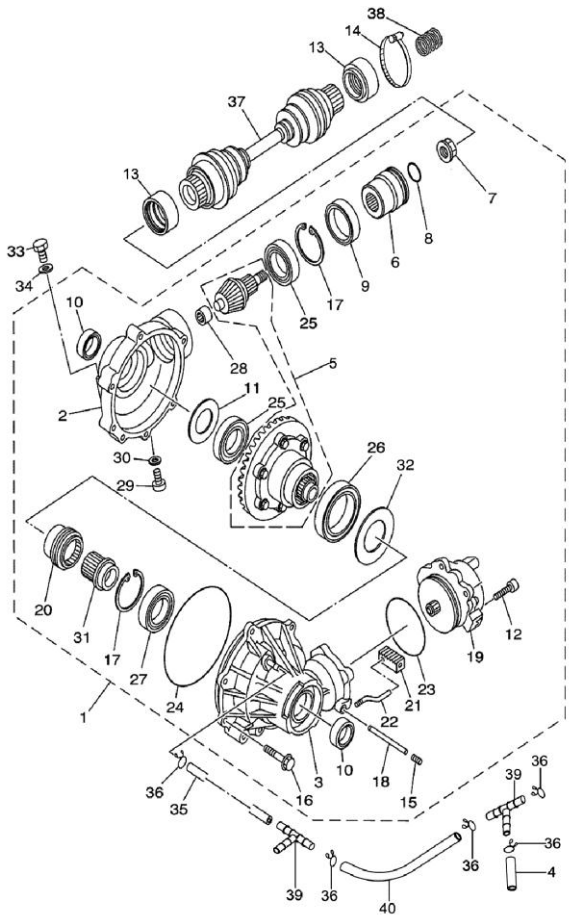

No.	Part No.	Part Name And Standard	Q'TY	REMARK
1	47100-107-0000	Front axle differential comp	1	
2	47102-107-0000	Front axle differential case Ⅱ	1	
3	47101-107-0000	Front axle differential case Ⅰ	1	
4	16514-107-0015	Rubber tube Ⅴ, carburetorφ7×φ11×90	1	
5	47103-107-0000	Drive & driven gears assy	1	
6	47173-107-0000	Mounting bracket,drive gears, front axle	1	
7	B10-M14×1.25-27	Hexagon flange self-lock nuts (with metallic insert) M14×1.25	1	
8	47104-115-0000	O-type ring φ14×φ7	1	
9	47105-115-0000	Oil seal, front axle input shaftφ48×φ65×9	1	
10	47106-115-0000	Oil seal, front axle output shaft	2	
11	47107-115-0100	Adjustment gasket, differential	2	
12	B15-M8×25-37	Socket hexagon screw M8×25	3	
13	26314-107-0000	Front dustproof rubber cover	2	
14	90751-107-0006	Hoop φ33-57	1	
15	B15-M8×20-37	Socket hexagon screw M8×20	1	
16	B15-M8×25-37	Hexagon flange bolt M8×25	6	
17	47110-107-0000	Spring washer d0=62	2	
18	47111-115-0000	Column pni φ5×80	1	
19	47130-115-0000	Divide device	1	
20	47174-107-0000	Sliding sleeve, divide device connection	1	
21	47114-115-0000	Rack	1	
22	47122-115-0000	Shaft fork iv	1	
23	47115-115-0000	O-ring φ2×φ81	1	
24	47116-115-0000	O-ring φ2.4×φ140	1	
25	47117-115-0000	Bearing 6007R	2	

FRONT CASE PART

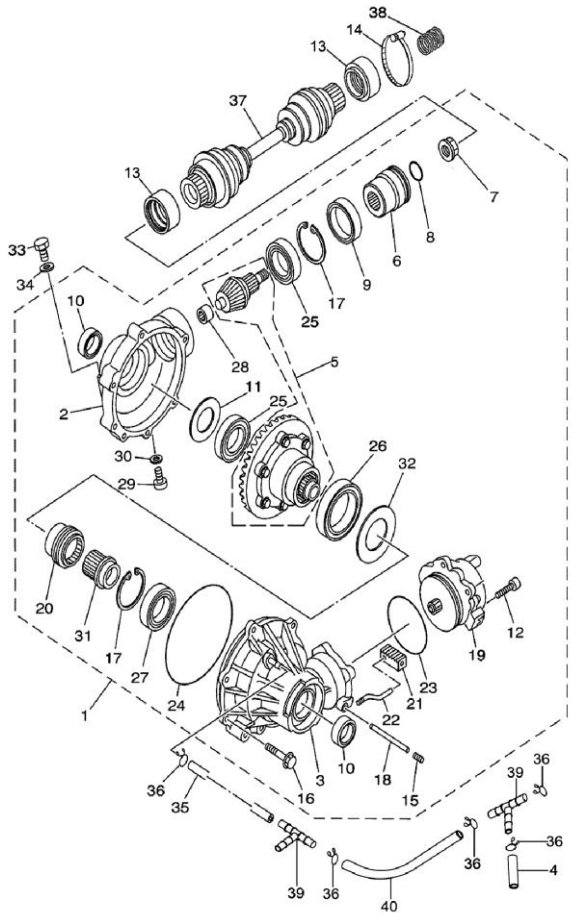

No.	Part No.	Part Name And Standard	Q'TY	REMARK
26	47118-115-0000	Bearing 6912	1	
27	47119-115-0000	Bearing 16007	1	
28	47120-115-0000	Bolling bearing HK152112	1	
29	47109-115-0000	Oil drain bolt M10×16	1	
30	47121-115-0000	Copper washer φ10×1.5	1	
31	47113-115-0000	Divide device connection	1	
32	47107-115-0000	Adjustment gasket, differential	1	
33	B06-M14×1.5×10-57	Hexagon flange bolt M14×1.5×10	1	
34	47121-115-0000	Copper washer φ14×2	1	
35	47123-115-0000	Vent pipe	1	
36	90723-115-0000	Clip φ10	6	
37	26310-107-0000	Front axle transmission shaft	1	
38	26313-115-0000	Spring,front axle transmission shaft	1	
39	16542-102-0000	Rear triplet joint I	2	
40	16514-115-0001	Secondary water tank rubber pipe Ⅱφ7×φ11×750	1	

REAR WHEEL PART

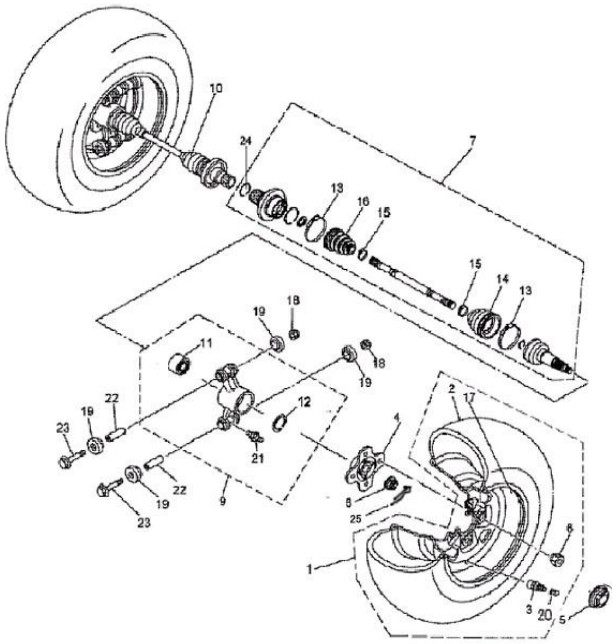

No.	Part No.	Part Name And Standard	Q'TY	REMARK
1	41200-107-0000	Rear wheel assy	2	
2	41270-115-1200	Rear tire	2	Se däck bilaga 2
3	41275-115-0000	Valve cock	2	
4	62330-107-0000	Mounting bracket for rear hub	2	
5	83101-107-0000	Wheel decoration cover Z103	2	
6	90431-102-0000	Tapered nut M10	8	
7	47250-107-0000	Rear constant velocity universal joint assy (L)	1	
8	47203-115-0000	Slotted nut M22×1.5	1	
9	62250-107-0000	Rear right knuckle assy	2	
10	47270-107-0000	Rear constant velocity universal joint assy (R)	1	
11	62258-107-0000	Bearing(Dac305532W),Rear Steering Knuckle	2	
12	62201-107-0000	Bushing	2	
13	47201-107-0000	Hoop a, dust proof shed	2	
14	47212-107-0000	Outer rubber dust proof boot (c-1605)	2	
15	47202-107-0000	Hoop B, dust proof shed	2	
16	47251-115-0000	Inner rubber dust proof boot (C-1520)	2	
17	41250-107-0709	Rear rim	2	
18	B10-M10×1.25-27	Hexagon flange self-lock nuts M10×1.25	4	
19	62252-107-0000	Rubber boot,steering knuckle	8	
20	41274-115-0000	Valve cock cover	2	
21	62255-115-0000	Oil cup M6,steeering knuckle	4	
22	62253-107-0000	Axle sleeve,liner	4	
23	B06-M10×1.25×95-57	Hexagonb flange bolt M10×1.25×95	4	
24	47252-115-0000	Circlip	2	
25	B12-2.5×40-W7	Cotter pin 2.5×40	2	

TRANSMISSION CASE, REAR AXLE

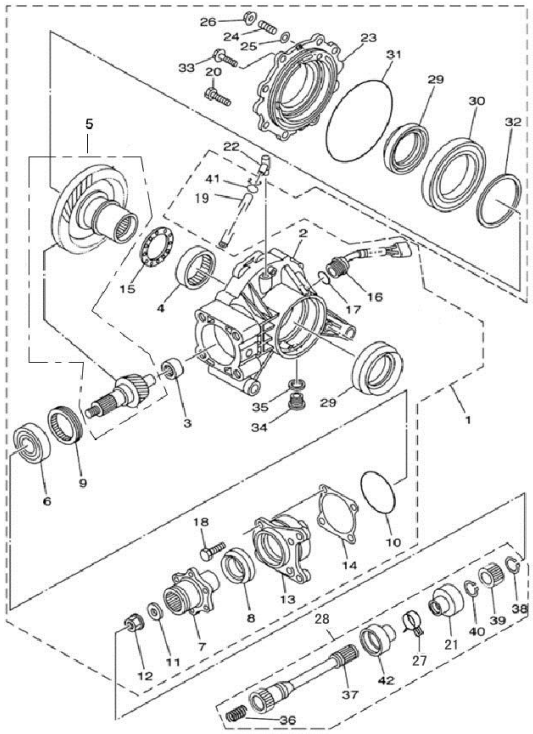

No.	Part No.	Part Name And Standard	Q'TY	REMARK
1	46100-107-0100	Rear axle differential comp.	1	
2	46101-107-0000	Front axle differential case Ⅰ	1	
3	46102-115-0000	Needle bearing HK223013	1	
4	46103-115-0000	Needle bearing HK556720	1	
5	46104-115-0000	Driving and driven gears	1	
6	46108-115-0000	Bearing 6305	1	
7	46106-115-0000	Mounting bracket,rear disk brake	1	
8	46107-115-0000	Oil seal φ61×φ35×9, input shaft	1	
9	46125-115-0000	Bolling bearing 55BM6720	1	
10	46109-115-0000	O-ring,rear drving gearφ3×φ71	1	
11	46110-115-0000	Washer φ12×φ30×4	1	
12	B10-M12×1.25-27	Hexagon flange self-lock nuts (with metallic insert) M12×1.25	1	
13	46111-115-0000	Mount bracket, rear brake caliper	1	
14	46112-115-0000	Rear adjustment gasket Ⅰ	2	
15	46113-115-0000	Rear adjustment gasket Ⅱ	1	
16	36300-107-0000	Speed sensor comp.	1	
17	46114-115-0000	O-ring gasket φ19.4×φ2.3, fuel injection	1	
18	B15-M8×25-37	Hexagon bolt M8×35	4	
19	46128-107-0000	Vent pipe, rear axle	1	
20	B15-M8×25-37	Hexagon flange bolt M8×25	6	
21	26338-115-0000	Rear dust cover, rear axle	1	
22	46115-115-0000	Nozzle joint	1	
23	46116-107-0000	Rear differential case Ⅰ	1	
24	46169-115-0000		4	
25	46168-115-0100	Washer φ8.5	1	

TRANSMISSION CASE, REAR AXLE

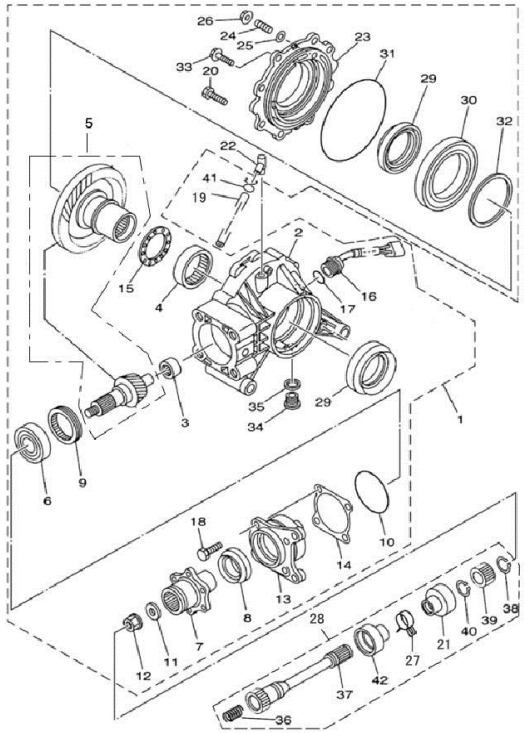

No.	Part No.	Part Name And Standard	Q'TY	REMARK
26	B22-M8-27	Hexagon flange nut M8	1	
27	90742-102-0000	Screw hoop φ20-32	2	
28	26330-107-0000	Rear transmission shaft comp	1	
29	46120-115-0000	Oil seal φ65×φ90×9, output shaft	2	
30	46121-115-0000	Bearing 16017	2	
31	46122-115-0000	O-ring φ3.1×φ150	1	
32	46123-115-0000	Adjustment gasket Ⅲ	2	
33	B06-M10×1.25×25-57	Hexagon flange nut M10×1.25×25	2	
34	46137-115-0000	Fuel drain plug	1	
35	47131-115-0000	Copper washer φ14×2	2	
36	26331-115-0000	Spring φ14×φ1.8×46	1	
37	26332-107-0000	Rear transmission shaft	1	
38	B20-22-BB	A type circlip d_0=22	4	d=20.5
39	26333-115-0000	Jointsleeve,rear axle transmission shaft	1	
40	B20-19-BB	A type circlip d_0=19	1	d=17.5
41	90724-115-0000	Clip φ11	1	
42	26334-115-0000	Front dust cover, rear axle	1	

REAR BRAKE PART

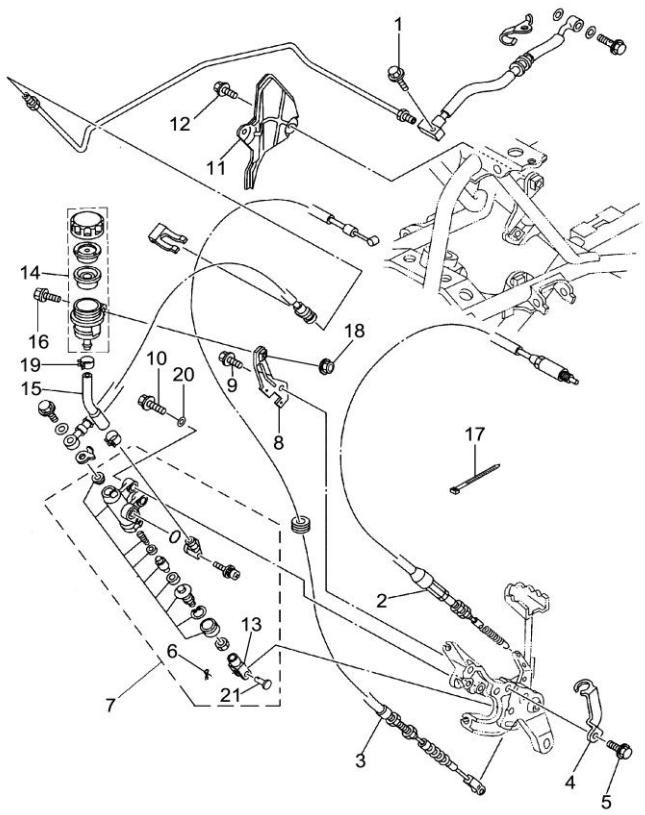

No.	Part No.	Part Name And Standard	Q'TY	REMARK
1	B05-M6×35-57	Hexagon flange bolt M6×35	1	
2	61050-107-0000	Reverse cable assy	1	
3	43210-107-0000	Parking brake cable	1	
4	43104-107-0000	Lamp switch bracket, rear brake	1	
5	B05-M6×12-57	Hexagon flange bolt M6×12	1	
6	B12-2×25-W7	Split pin	1	
7	44520-107-0100	Auxiliary bumper	1	
8	54247-107-0000	Oil cup bracket, rear brake	1	
9	B05-M6×12-57	Hexagon flange bolt M6×12	1	
10	B05-M8×22-57	Hexagon flange bolt M8×22	2	
11	18323-107-0000	Heat insulation board, muffler	1	
12	B05-M6×12-57	Hexagon flange bolt M6×12	2	
13	44008-115-0000	Link fork, mandril	1	
14	44918-107-0000	Oil cup	1	
15	44501-107-0000	Oil filling pipe,oil cup	1	
16	B05-M6×16-57	Hexagon flange bolt M6×16	1	
17	95411-115-0001	Cable Ties Ⅱ（L=200）	1	
18	B22-M6-27	Hexagon flange nut M6	1	
19	44011-115-0000	Oil pipe hoop	2	
20	B01-6-B7	Spring washer -6	2	
21	44009-115-0000	Connecting axle	1	

COOLING PIPE, CLUTCH

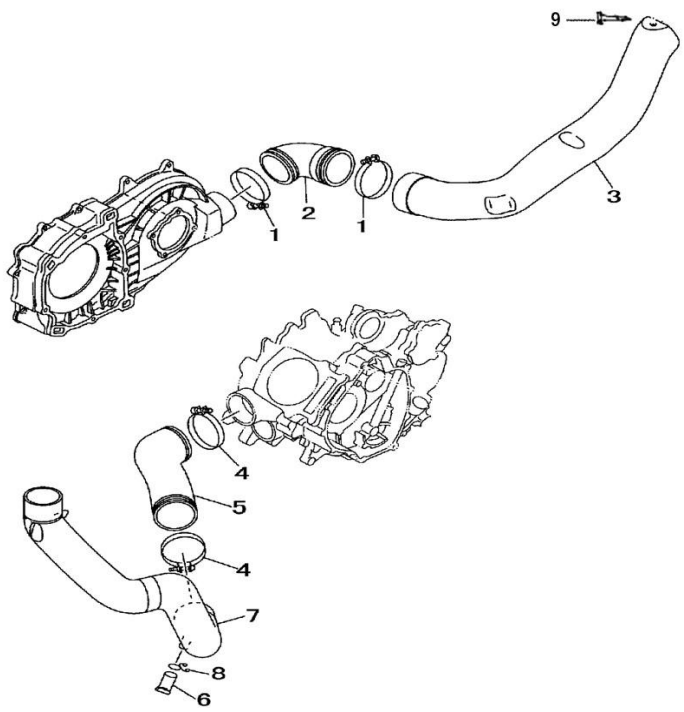

No.	Part No.	Part Name And Standard	Q'TY	REMARK
1	90751-103-0003	Hoop assy70-90	2	
2	17165-107-0000	Air-out pipe joint clamp ,clutch	1	
3	17164-107-0000	Inlet pipe, clutch	1	
4	90751-103-0003	Hoop assy70-90	2	
5	17163-107-0000	Inlet pipe joint, clutch	1	
6	17133-104-0000	Leakage pipe plug	1	
7	17162-107-0000	Air-out pipe,clutch	1	
8	17108-104-0000	Wire clip	1	
9	B18-ST4.2×25C-WA	Cross Plate Head Tapping Screw St4.2×25	1	

GEARSHIFT COMP

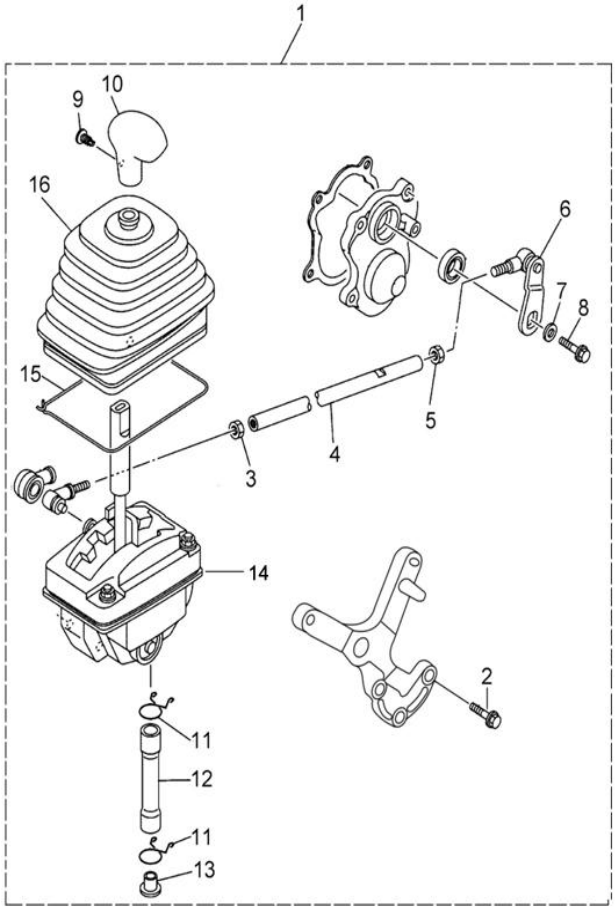

No.	Part No.	Part Name And Standard	Q'TY	REMARK
1	23500-107-0000	Gear shifter assembly	1	
2	B05-M8×20-57	Hexagon flange bolt M8×20	3	
3	23521-107-0000	Hexagon nut M6	1	
4	23520-107-0000	Gearshift rod	1	
5	23522-107-0000	Hexagon nut M6	1	
6	2352A-107-0000	Gearshift rod joints assy	1	
7	B03-6-B7	Washer φ6×φ18×1.5	1	
8	B05-M6×12-57	Hexagon flange bolt M6×12	1	
9	23531-115-0000	Plastic screw	1	
10	23515-107-0000	Handle sheath	1	
11	23533-115-0000	Wire clipφ14	2	
12	23534-115-0000	Leakage pipe plug	1	
13	23535-115-0000	Plug	1	
14	23519-107-0000	Gearshift body assy	1	
15	23532-115-0000	Connector hoop	1	
16	23518-107-0000	Rubeer dust sleeve	1	

TAILLIGHT

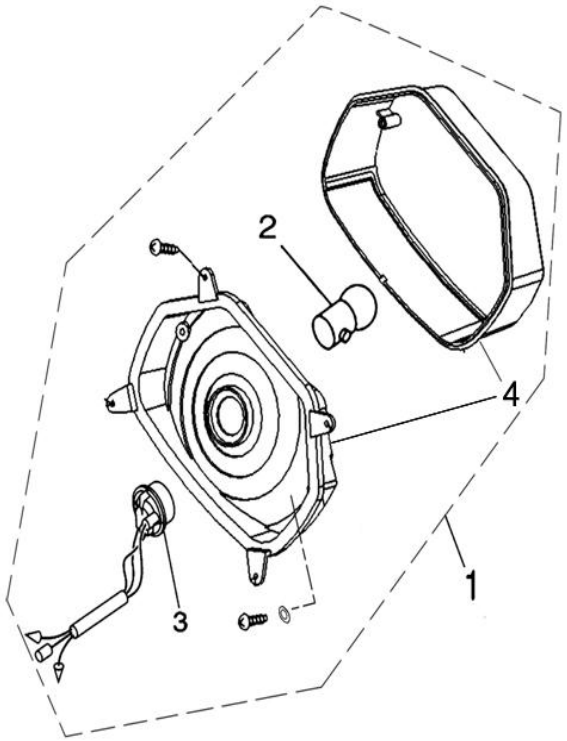

No.	Part No.	Part Name And Standard	Q'TY	REMARK
1	35200-107-0000	Taillight comp.	1	
2	35203-115-0000	Bulb（12V 21W/5W）	1	
3	35230-107-0000	Cable, taillight	1	
4	35201-107-0000	Taillight cover	1	

FUEL TANK FOR EFI MODELS

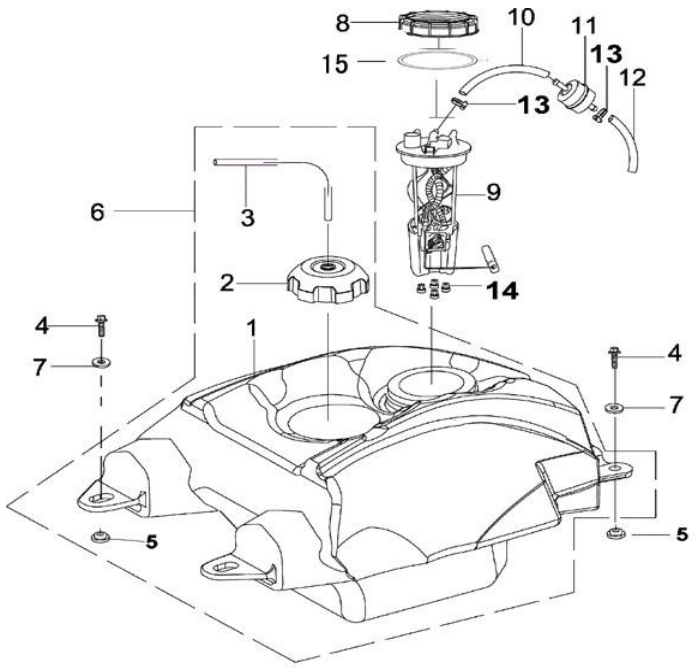

No.	Part No.	Part Name And Standard	Q'TY	REMARK
1	81141-107F-0000	Fuel Tank(EFI Engine)	1	
2	81132-107-0000	Lid For Fuel Tank	1	
3	81143-107-0000	Fuel Tank Vent Pipeφ5×Φ9×400	1	
4	B05-M6×30-57	Hexagon Flange Bolt M6×30	4	
5	90697-107-0002	Steps Bushingφ6×φ30×13	2	
6	81140-107F-0000	Fuel Tank Assy(EFI Engine)	1	
7	90691-110-0009	Washerφ6×Φ25×2	2	
8	39505-107F-0000	Cover, Fuel Pump(EFI Engine)	1	
9	39500-107F-0000	Fuel Pump(EFI Engine)	1	
10	16511-110-0001	Fuel Pipe Ⅳφ8×Φ14×330(EFI Engine)	1	
11	17111-116-0000	High Voltage Fuel Filter(EFI Engine)	1	
12	16511-110-0003	Fuel Pipe Ⅴφ8×Φ14×130(EFI Engine)	1	
13	90401-010-0000	Clamp(EFI Engine)	3	
14	94142-116-0005	Shock Absorbtion Rubber φ15-6	4	
15	94021-107F-0000	Seal Gasket For Fuel Pump (EFI Engine)	1	
16	90692-107-0011			

DISC BRAKE PART

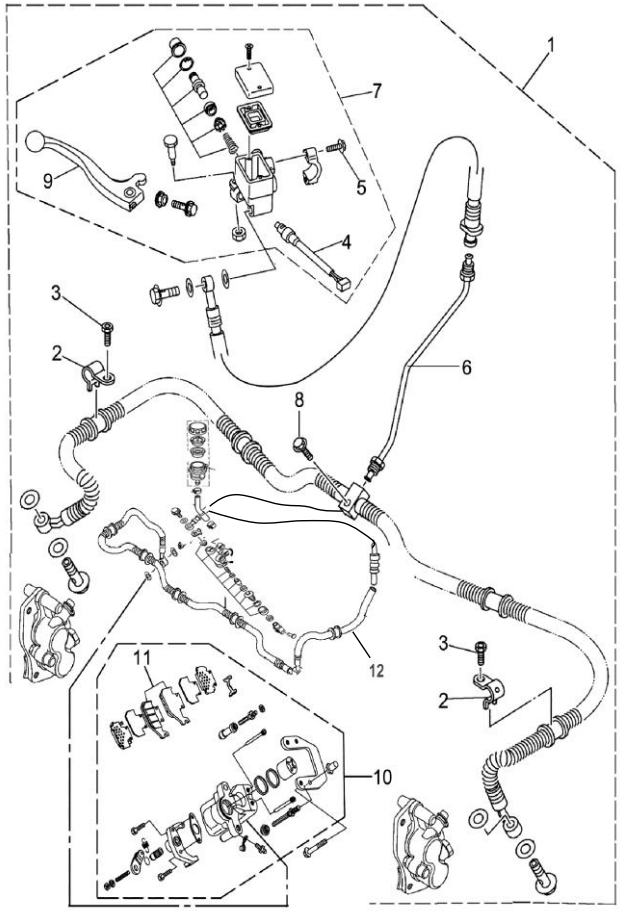

No.	Part No.	Part Name And Standard	Q'TY	REMARK
1	44000-107-0000	Disc brake parts	1	E-mark专用
2	44923-107-0000	Oil pipe clip	2	
3	B05-M6×12-57	Hexagon flange bolt M6×12	2	
4	6107A-107-0000	Switch signal lines, front brake	1	
5	B2-M6×24-57	Hexagon flange bolt M6×24	2	
6	44400-107-0000	Front brake hose assy	1	
7	44130-107-0000	Front brake pump	1	
8	B05-M6×30-57	Hexagon flange bolt M6×30	1	
9	44132-107-0000	Handle grip,front brake	1	
10	44700-107-0000	Rear Brake Caliper Parts	1	
11	44710-107-0000	Pad set	1	säljes parvis
12	44720-107-0000	Rear brake lines	1	

DISK BRAKE INPUT

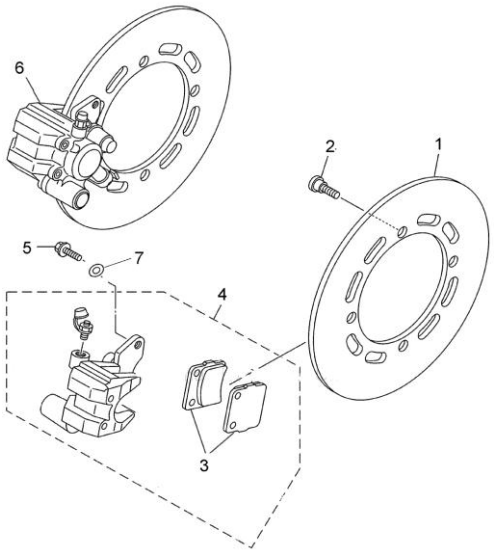

No.	Part No.	Part Name And Standard	Q'TY	REMARK
1	41105-107-0000	Front brake disk	2	
2	90101-115-0000	Hexagon nut M8×15-φ15×5	8	
3	44318-107-0000	Outer brake pad	2	säljes parvis
4	44300-107-0000	Front brake caliper (R)	1	
5	B05-M8×16-57	Hexagon flange bolt M8×16	4	
6	44200-107-0000	Front brake caliper (L)	2	
7	B01-8-B7	Spring washer -8	4	
	41201-115-0000	Parking disc	1	
	90111-115-0000	Hexagon head bolt	6	

FOOTREST PEDAL

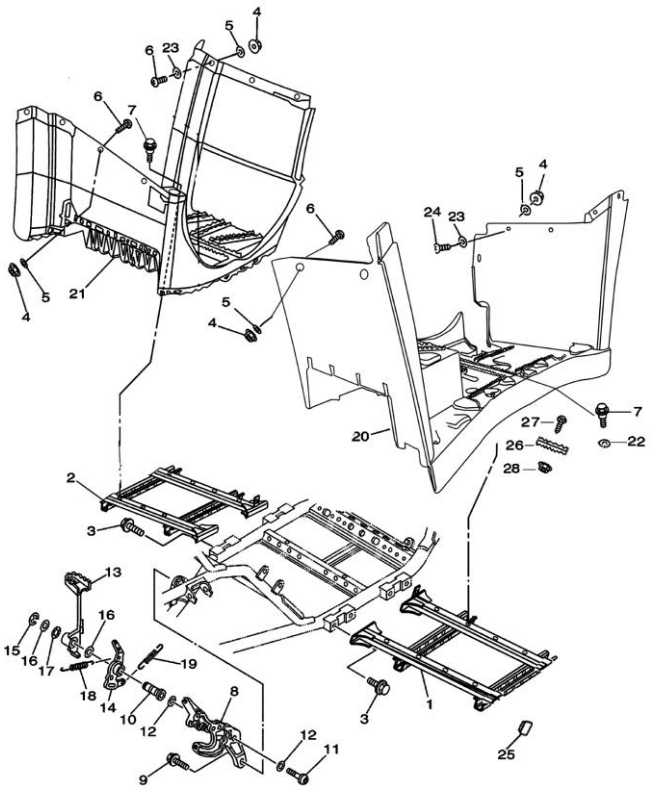

No.	Part No.	Part Name And Standard	Q'TY	REMARK
1	5416A-107D-0000	Front footrest bracket assy (L)	1	
2	5413A-107D-0000	Front footrest bracket assy (R)	1	
3	B06-M10×1.25×16-57	Hexagon flange bolt M10×1.25×16	8	
4	B09-M6-27	Hexagon flange self-lock nuts (with metallic insert) M6	8	
5	B03-6-B7	Washer φ6×φ18×1.5	8	
6	90542-102-0006	Cross large plate head screw M6×25	4	
7	B05-M6×16-57	Hexagon flange bolt M6×16	8	
8	41261-107-0100	Brake pump bracket assy	1	
9	B05-M8×25-57	Hexagon flange bolt M8×25	2	
10	90694-107-0012	Rear brake pedal pin	1	
11	B05-M8×25-57	Hexagon flange bolt M8×25	1	
12	B04-8-B7	Washer φ8×φ16×1.6	2	
13	4311A-107-0000	Rear brake pedal assy	1	
14	43105-107-0000	Rear footrest bracket	1	
15	90753-115-0002	Split washer φ12×1	1	
16	90691-107-0004	Washer φ15×φ22×1.5	2	
17	B13-14-BB	Spring washer d1=14	1	
18	95081-107-0012	Tension spring Ⅻ	1	
19	95081-107-0011	Tension spring Ⅶ	1	
20	82801-107D-0000	Left footrest protector	1	
21	82802-107D-0000	Right footrest protector	1	
22	B03-6-B7	Washer φ6×φ18×1.6	8	
23	94145-102-0003	Rubber washer Ⅱ	8	
24	90542-102-0004	Cross large plate head screw M6×20	4	
25	82021-104-0005	Stopper Ⅱ	4	

FOOTREST PEDAL

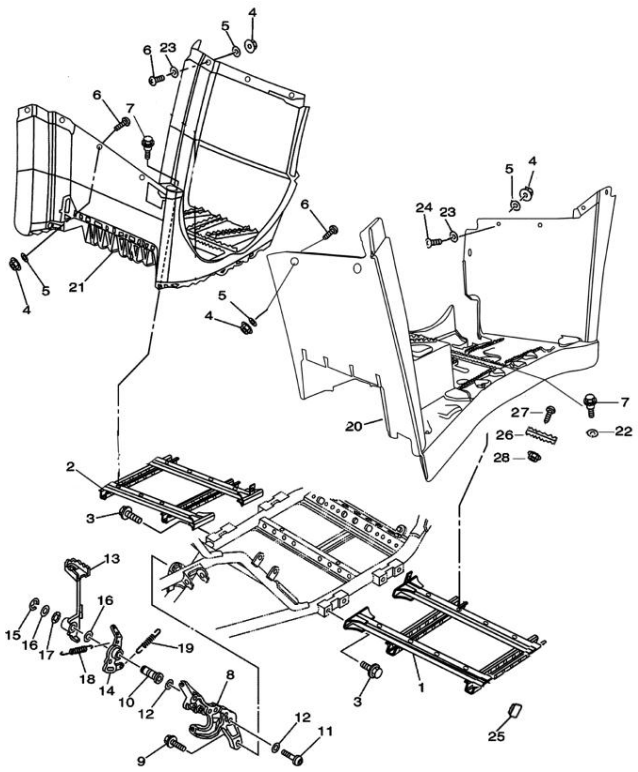

No.	Part No.	Part Name And Standard	Q'TY	REMARK
26	54216-107D-0000	Anti-skidding block,footrest	2	
27	90527-104-0000	Cross large plate head screw M5×16	2	
28	B22-M5-27	Hexagon flange bolt M5	2	

METER					
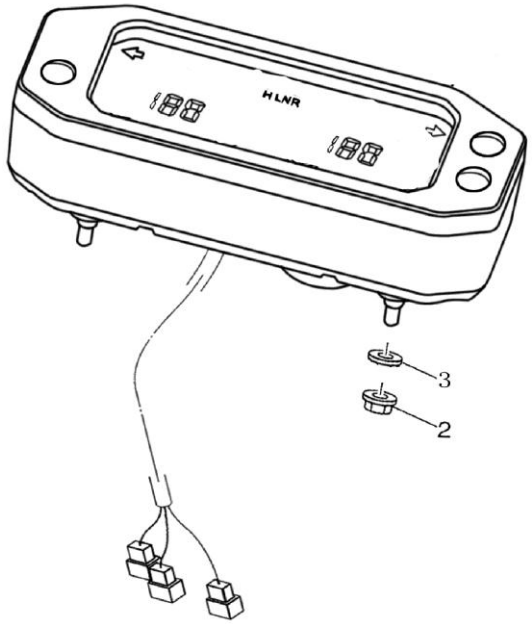	**No.**	**Part No.**	**Part Name And Standard**	**Q'TY**	**REMARK**
	1	36100-115H-0100	Meter assy	1	
	2	B22-M6-27	Hexagon flange nut M6	3	
	3	B03-6-B7	Washer φ6.4×φ18×1.6	3	

SEAT

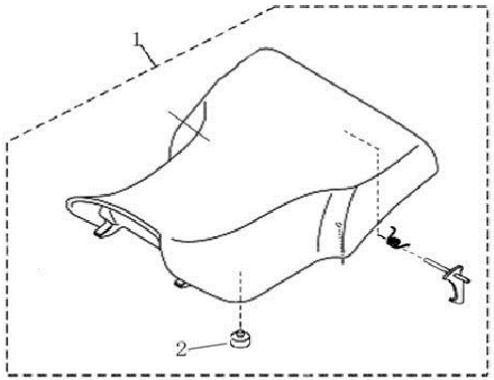

No.	Part No.	Part Name And Standard	Q'TY	REMARK
1	71210-107D-0000	Seat assy	1	
2	71213-107-0000	Rubber cushion	6	

FUEL TANK COVER COMP

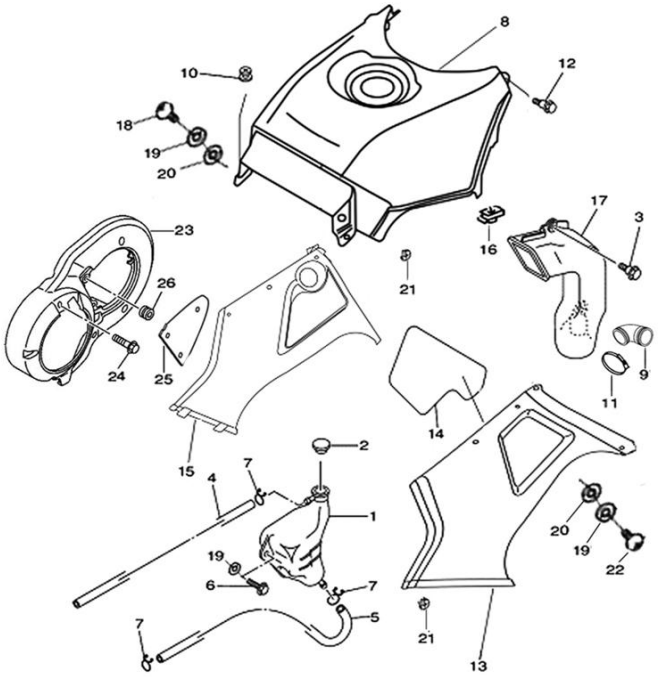

No.	Part No.	Part Name And Standard	Q'TY	REMARK
1	19040-107-0000	Secondary water tank	1	
2	19042-107-0000	Secondary water tank cover	1	
3	90144-107-0000	hexagon step bolt m6×16-φ10×4	2	
4	19051-107-0000	Secondary water tank rubber pipe Ⅰφ5×φ9×880	1	
5	19052-107-0000	Secondary water tank rubber pipe Ⅱφ5×φ9×870-30	1	
6	B05-M6×16-57	Hexagon flange bolt M6×16	2	
7	90722-115-0000	Hoop φ9	3	
8	82709-107D-0000	Fuel-tank shield	1	Se färgkods tabell
9	17182-107-0000	Vent-pipe joint, brake	1	
10	94022-107-0000	H style rubber ring	2	
11	1716A-115-0000	Hoop assy	2	
12	90144-107-0000	hexagon step bolt M6×16-φ10×4	2	
13	82712-107D-0000	Right shield,fuel tank	1	
14	95311-107-0100	Heat insulation paper Ⅺ	1	
15	82711-107D-0000	Left shield,fuel tank	1	
16	90403-102-0000	Clip for bolt M6×2	4	
17	17181-107-0000	Vent pipe,brake	1	
18	90532-102-0000	Cross large plate head screw M6×20	11	
19	B03-6-B7	Washer φ6×φ18×1.6	15	
20	94062-102-0000	Rubber washer Ⅱ	13	
21	B09-M6-27	Hexagon flange self-lock nuts (with metallic insert) M6	7	
22	90533-102-0000	Cross large plate head screw M6×25	2	
23	83602-107-0000	Left strip, front cover	1	
24	B05-M6×20-57	Hexagon flange bolt M6×20	6	
25	83603-107-0000	Dipstick cover	1	

FUEL TANK COVER COMP

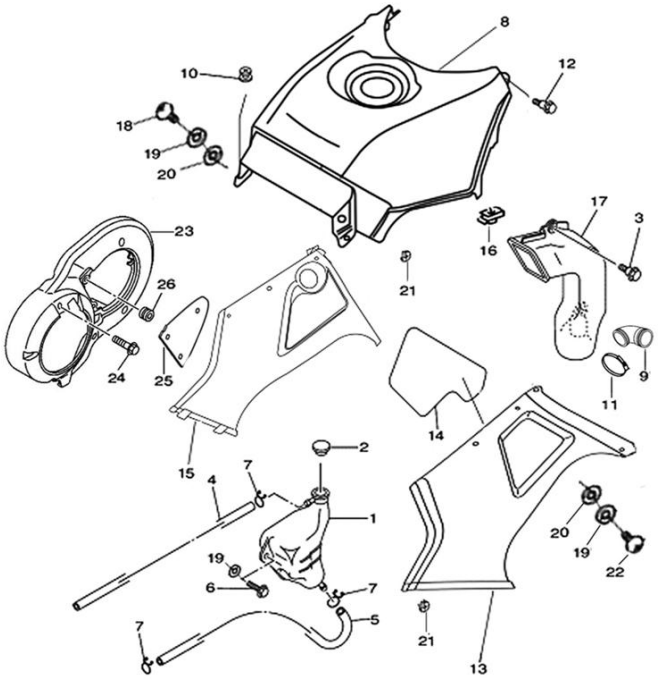

No.	Part No.	Part Name And Standard	Q'TY	REMARK
26	94041-107-0000	H style rubber ring Ⅰ	3	

CARRIER

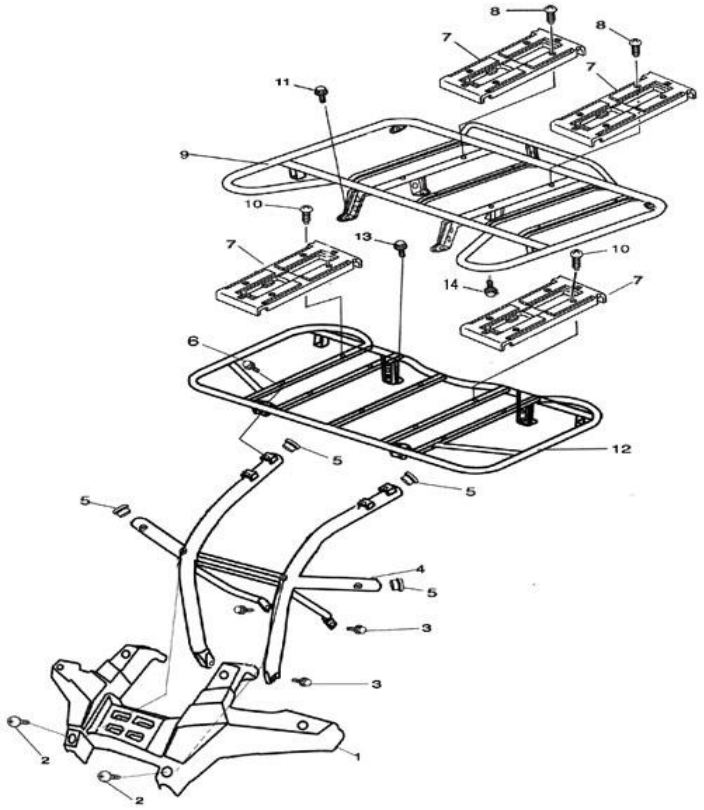

No.	Part No.	Part Name And Standard	Q'TY	REMARK
1	73602-107D-0000	Protective cover,front bumper	1	
2	90542-102-0003	Cross large plate head screw M6×16	6	
3	B05-M8×16-57	Hexagon flange bolt M8×16	4	
4	7360A-107D-0000	Front bumper assy	1	
5	73601-107-0000	Pipe plug Ⅰ, front bumper	4	
6	B05-M8×16-57	Hexagon flange bolt M8×16	2	
7	72141-107-0000	Rear carrier cover	4	
8	90542-102-0001	Cross large plate head screw M5×16	8	
9	7214A-107D-0000	Rear carrier assy	1	
10	90542-102-0001	Cross large plate head screw M5×16	8	
11	B05-M8×20-57	Hexagon flange bolt M8×20	4	
12	7213A-107D-0000	Front carrier assy	1	
13	B05-M8×50-57	Hexagon flange bolt M8×50	2	
14	B05-M6×16-57	Hexagon flange bolt M6×16	2	
15	90542-102-0007	Phillips head screws M5 × 12	4	

REAR FRAME BODY

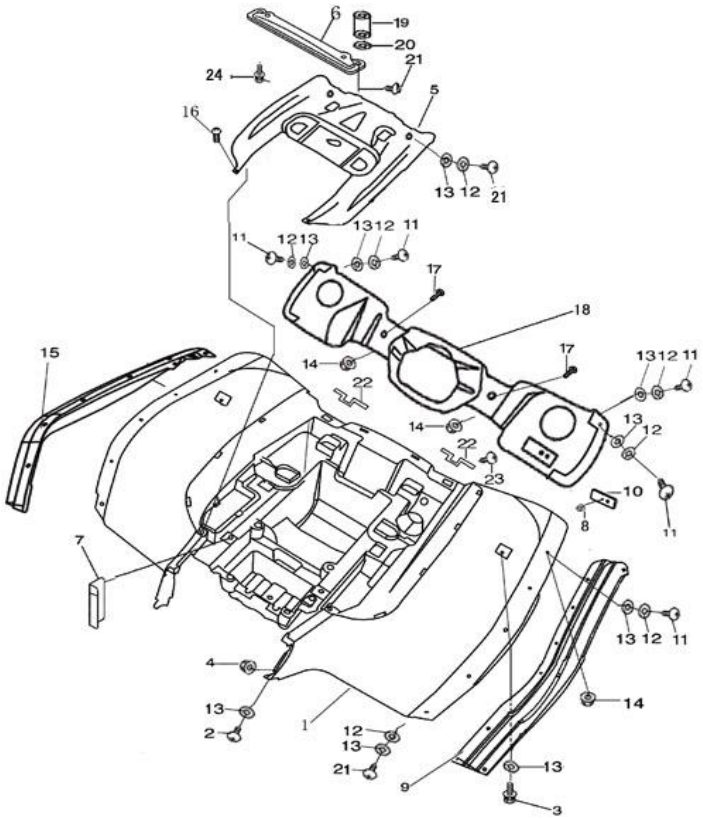

No.	Part No.	Part Name And Standard	Q'TY	REMARK
1	83601-107D-0000	Rear cover	1	Se färgkods tabell
2	B18-ST6×20C-W7	Cross recessed plate head screw ST6×20	2	
3	B05-M6×16-57	Hexagon flange bolt M6×16	2	
4	90436-102-0000	Plastic nut	4	
5	83604-107D-0000	Rear body cover board	1	
6	51381-107-0000	Seat bracket	1	
7	95308-107-0000	Heat insulation paper Ⅷ	1	
8	B22-M5-27	Hexagon flange bolt M5	2	
9	83203-107D-0000	Left strip, Rear Cover	1	
10	34820-102-0000	Rear reflector assy	2	
11	90542-102-0004	Cross large plate head screw M6×20	12	
12	94145-102-0003	Rubber washer φ7×φ20×2.5	22	
13	B03-6-B7	Washer φ6×φ18×1.6	26	
14	B09-M6-27	Hexagon flange self-lock nuts (with metallic insert) M6	20	
15	83204-107D-0000	Right strip, rear cover	1	
16	B18-ST6×20C-W7	Cross screw ST6×20	2	
17	B05-M6×16-57	Hexagon flange bolt M6×16	2	
18	82641-107D-0000	Taillight cover	1	
19	94019-107-0000	Cylindrical rubber cushion	2	
20	B03-6-B7	Washer φ6×φ18×1.6	2	
21	90542-102-0006	Cross large plate head screw M6×25	12	
22	54253-107D-0000	Rear mudguard bracket Ⅱ	2	
23	B05-M6×16-57	Hexagon flange bolt M6×16	2	
24	B05-M8×16-57	Hexagon flange bolt M8×16	4	

FRONT FRAME BODY&LARGE LIGHT SETTING PLATE (C)

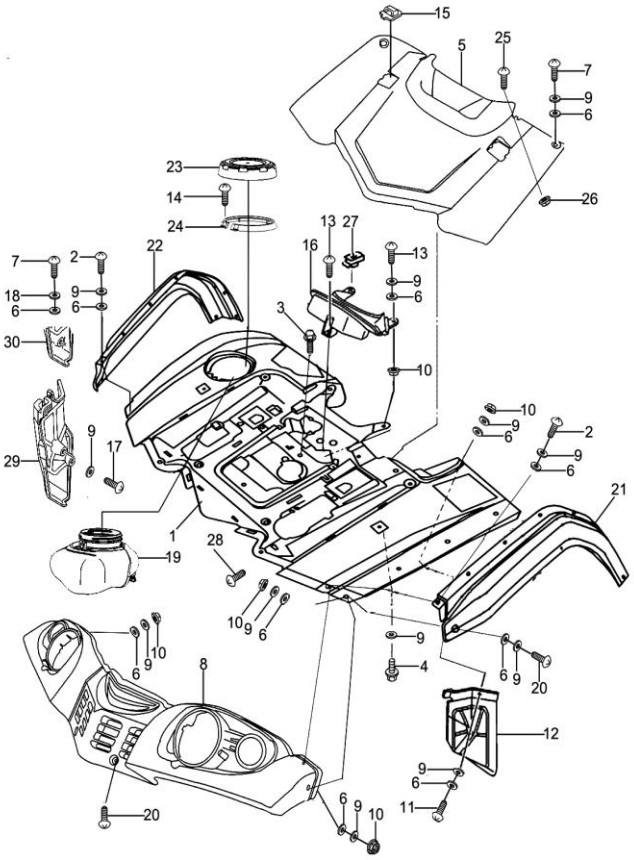

No.	Part No.	Part Name And Standard	Q'TY	REMARK
1	83301-107D-0000	Front cover	1	Se färgkods tabell
2	90532-102-0000	Cross large plate head screw M6×20	2	
3	B05-M6×20-57	Hexagon flange bolt M6×20	2	
4	B05-M6×16-57	Hexagon flange bolt M6×16	2	
5	83302-107D-0000	Front body cover board	1	
6	94062-102-0000	Rubber washer Ⅱ	17	
7	90532-102-0000	Cross large plate head screw M6×20	6	
8	82501-107D-0000	Headlight cover	1	
9	B03-6-B7	Washer φ6×φ18×1.6	23	
10	90533-102-0000	Cross large plate head screw M6×25	4	
11	90531-102-0000	Cross large plate head screw M6×16	1	
12	83306-107D-0000	Left shield, front frame body	1	
13	90529-103-0000	Cross large plate head screw M6×12	1	
14	90526-102-0000	Cross large plate head screw M5×12	2	
15	72132-107-0000	Dust proof cover,front carrier	1	
16	82601-107D-0000	Dash board	1	
17	B05-M6×16-57	Hexagon flange bolt M6×16	1	
18	90606-102-0100	Washer φ6×φ12×1	2	
19	89811-107-0000	Sundry box	1	
20	B05-M6×16-57	Hexagon flange bolt M6×16	4	
21	83201-107D-0000	Left strip, front body cover	1	
22	83202-107D-0000	Right strip, front body cover	1	
23	89822-107-0000	Sundry box cover	1	
24	89824-107-0000	Orientation ring	1	
25	90529-103-0000	Cross large plate head screw M6×12	2	

FRONT FRAME BODY&LARGE LIGHT SETTING PLATE (C)

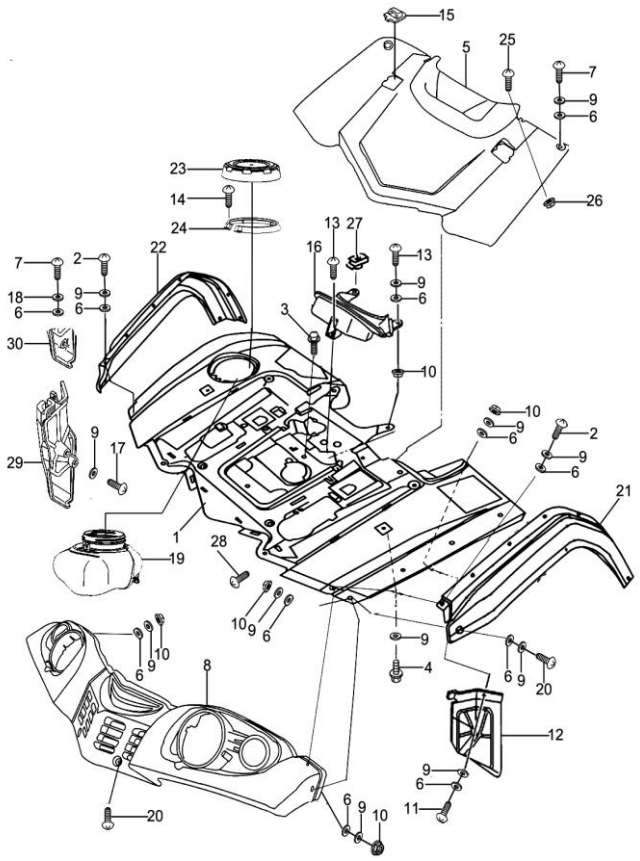

No.	Part No.	Part Name And Standard	Q'TY	REMARK
26	B22-M6-27	Hexagon flange nut M6	8	
27	90403-102-0000	Clip for bolt M6×2	3	
28	B18-ST3.9×13C-W7	Cross plate head tapping screw st3.9×13	2	
29	82202-107-0000	Brake pedal shield	1	
30	83305-107D-0000	Right shield, front frame body	1	

HEADLIGHT

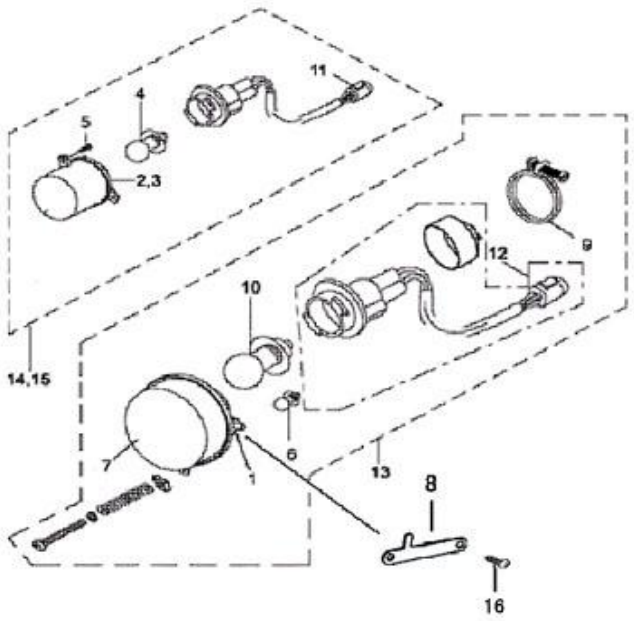

No.	Part No.	Part Name And Standard	Q'TY	REMARK
1	35168-107C-0000	Headlight cover（L）	2	
2	35315-107C-0000	Front left turning light cover	1	
3	35442-107C-0000	Front turninh light cover	1	
4	35375-115-0000	Front turn signal bulb （12V 10W）	2	
5	B18-ST4.2×13C-W7	Cross plate head tapping screw ST4.2×13	6	
6	35171-115-0000	Position light bulb （12V 5W）	2	
7	35181-107C-0000	Light cover, left	2	
8	35169-107D-0000	Seesaw	2	
9	35140-107-0000	Adjusted hoop set	2	
10	35163-115-0100	Front headlight bulb （12V 35W）	2	
11	35313-107C-0000	Front turn signal cable	2	
12	35164-107C-0000	Front headlight cable	2	
13	35160-107C-0000	Front headlight assy	2	
14	35310-107C-0000	Front left turning light	1	
15	35340-107C-0000	Front right turning light	1	
16	90541-115-0003	Cross plate head tapping screw ST4.8×13	4	

REAR TURN LIGHT

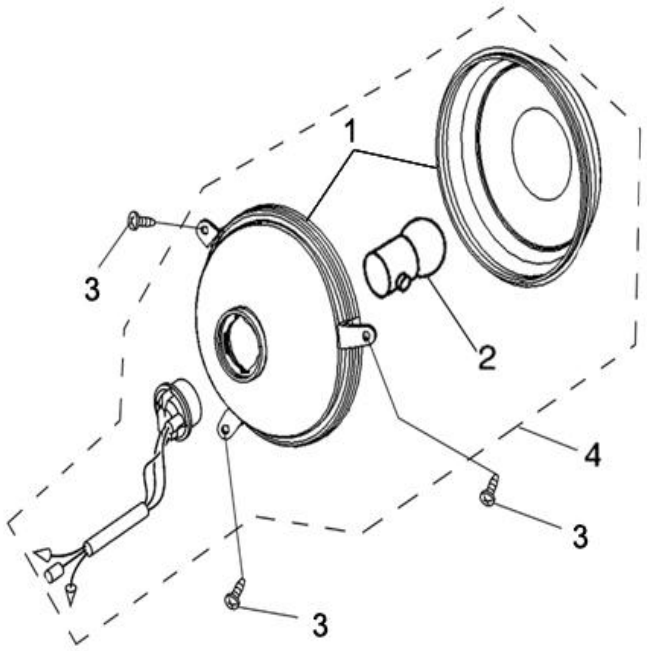

No.	Part No.	Part Name And Standard	Q'TY	REMARK
1	35411-107-0000	Light cover,tail light	2	
2	35375-115-0000	Bulb （12V 10W）	2	
3	B18-ST4.2×13C-W7	Cross plate head tapping screw ST4.2×13	6	
4	35410-107-0000	Left Taillight comp.	1	
	35430-107-0000	Right Taillight comp.	1	

WINDSHIELD PART (Tillbehör)

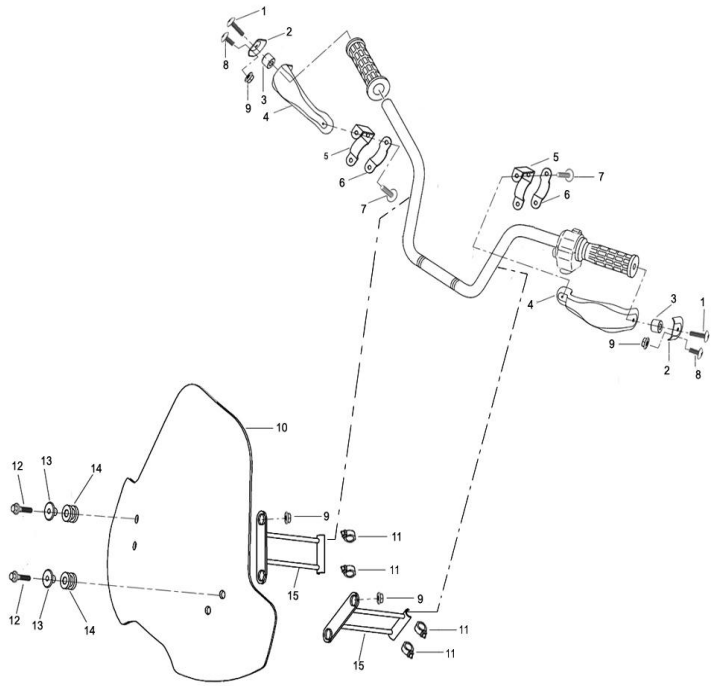

No.	Part No.	Part Name And Standard	Q'TY	REMARK
1	90537-115-0000	Cross recessed pan head screw M6×40	2	
2	61108-107-0000	Decoration,handle bar shield	2	
3	90682-107-0000	Bushingφ20×φ9×14	2	
4	61104-107-0000	Protective cover handle bar pipe	2	
5	6111A-107-0000	Support Ⅰ,handle bar shield	2	
6	6112A-107-0000	Support Ⅱ,handle bar shield	2	
7	90529-103-0000	Cross big plate head screw M6×12	6	
8	90531-102-0000	Cross recessed pan head screw M6×16	2	
9	B22-M6-27	Hexagon flange nut M6	6	
10	83800-107-0000	Front windshield	1	
11	90742-102-0000	Screw hoopφ20×32	4	
12	B05-M6×25-57	Hexagon flange bolt M6×25	4	
13	90625-115-0000	Flanging bushingφ6.5×φ9×φ22×12	4	
14	94049-115-0000	工style rubber ring IX	4	
15	54242-107-0000	Fix bracket ,windshield	2	

REAR BACK REST (Tillbehör)

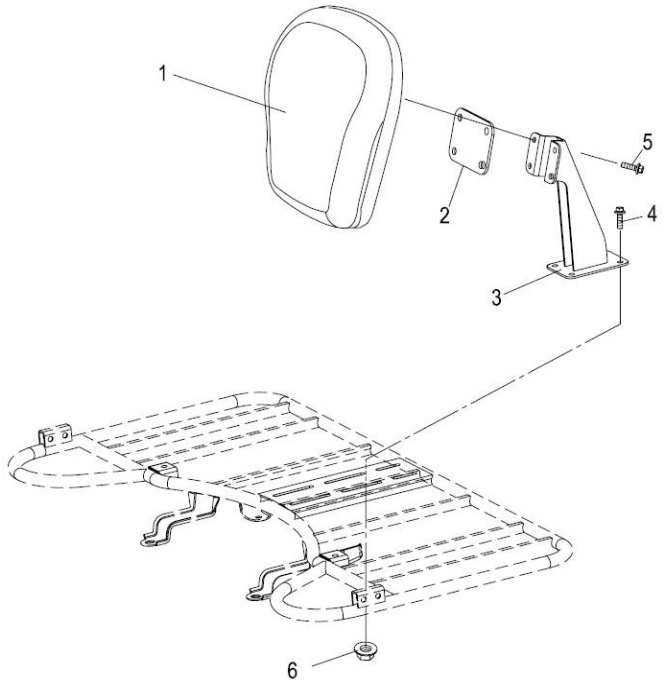

No.	Part No.	Part Name And Standard	Q'TY	REMARK
1	71411-107-0000	Back rest	1	
2	71412-107-0000	Reinforced plate of back rest	1	
3	71413-107-0000	Soleplate of back rest	1	
4	B05-M8×20-57	Hexagon flange bolt M8×20	4	
5	B05-M8×25-57	Hexagon flange bolt M8×25	4	
6	B22-M8-27	Hexagon flange nut M8	4	

REAR CARRIER BOX (Tillbehör)

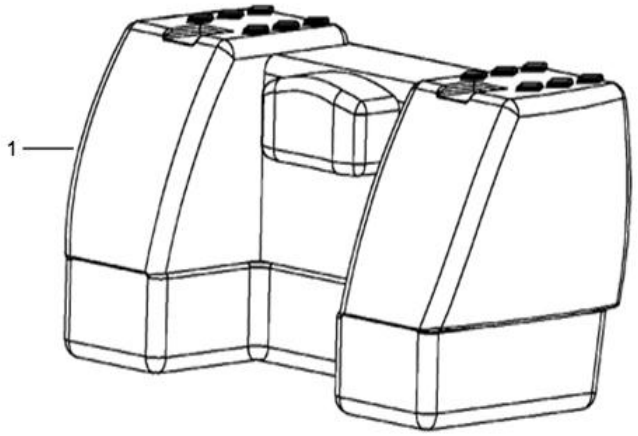

No.	Part No.	Part Name And Standard	Q'TY	REMARK
1	73400-107-0000	Rear carrier box	1	

SNOW PLOUGH、WINCH (Tillbehör)

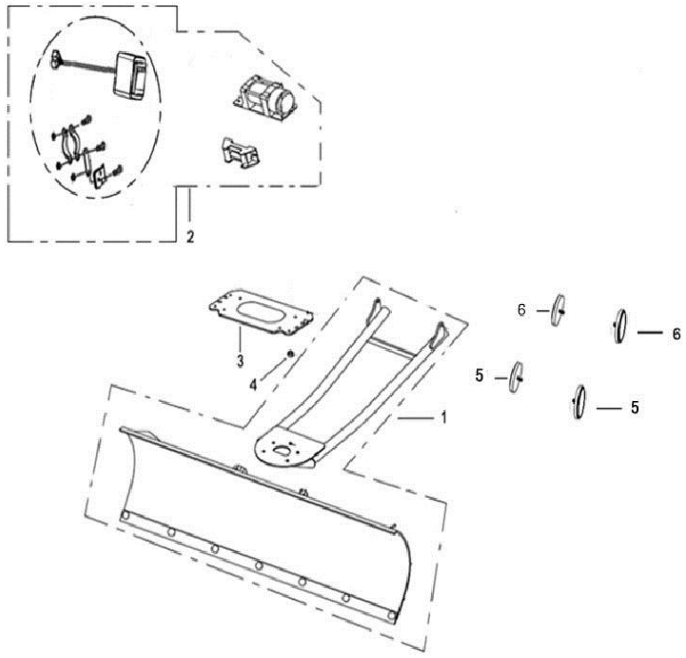

No.	Part No.	Part Name And Standard	Q'TY	REMARK
1	73200-115-0000	Snow plow 1.2m	1	
	73200-115-0100	Snow plow 1.52m	1	
	73200-115-0200	Snow plow 1.83m	1	
2	73100-115-0000	Winch（2500）	1	
	73100-115-0100	Winch（3500）	1	
3	54608-107-0000	Fix board for snow plow	1	
4	B08-M8-2A	Hexagon nut M8	8	
5	34810-115-0000	Side reflector assy	2	
6	34810-115-0100	Side reflector assy	2	

FRONT AND REAR RIM(OPTION)

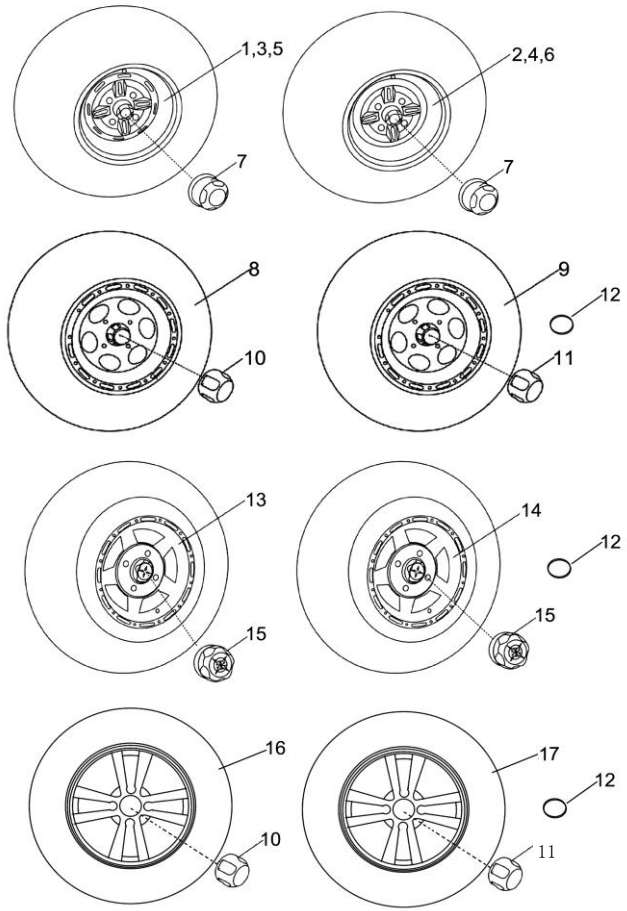

No.	Part No.	Part Name And Standard	Q'TY	REMARK
1	41120-107-0705	Front rim	2	Gul-103
2	41250-107-0705	Rear rim	2	Gul-103
3	41120-107-0709	Front rim	2	Borstat stål-103
4	41250-107-0709	Rear rim	2	Borstat stål-103
5	41120-107-0704	Front rim	2	Svart-103
6	41250-107-0704	Rear rim	2	Svart-103
7	83101-107-0000	Wheel decoration cover Ⅰ	4	lock-103
8	41120-107-1100	Front rim	2	aluminium-104
9	41250-107-1100	Rear rim	2	aluminium-104
10	83102-115-0000	Wheel decoration cover Ⅱ	2	lock-104
11	83103-115-0000	Wheel decoration cover Ⅲ	2	lock-105
12	41131-115-0000	Clamping spring, decoration cover	4	
13	41120-115-1500	Front rim	2	aluminium-110 SWE
14	41250-115-1500	Rear rim	2	aluminium-110 SWE
15	83105-115-0000	Wheel decoration cover Ⅴ	8	lock-107
16	41120-104F-1B00	Front rim	2	aluminium-111
17	41250-104F-1B00	Rear rim	2	aluminium-111

Color code number					
	No.	**Part No.**	**Color**		
	1	*****-****-0001	Red		SWE
	2	*****-****-0002	Blue		
	3	*****-****-0003	White		
	4	*****-****-0004	Black		
	5	*****-****-0005	Yellow		
	6	*****-****-0006	Green		
	7	*****-****-0007	Dark green		SWE
	8	*****-****-0008	Green camouflage		
	9	*****-****-0009	Brushed silver		SWE
	10	*****-****-0010	Yellow camouflage Vista		
	11	*****-****-0011	Orange		
For example：The front body cover's part no.is 83301-115-0000,if the color of front body cover changed to be red,the part no.should be 83301-115-0001.					

2: Däck Serietabell					
	No.	**Part No.**	**Part Name And Standard**	**Q'TY**	**REMARK**
	1	41170-115-0200	Front Tyre(At25×8-12, Brand: Wanda)	2	
	2	41270-115-1200	Rear Tyre(At25×10-12, Brand: Wanda)	2	
	3	41170-115-5200	Front Tyre(At26×9-12,Brand: Wanda)	2	
	4	41270-115-6200	Rear Tyre(At26×11-12,Brand: Wanda)	2	
	5	41170-115-7200	Front Tyre(At26×9-14, Brand: Wanda)	2	
	6	41270-115-8200	Rear Tyre(At26×11-14, Brand:Wanda)	2	
	7	41170-115-0400	Front Tyre(At25×8-12, Brand: Carlisle)	2	
	8	41270-115-1400	Rear Tyre(At25×10-12, Brand: Carlisle)	2	
	9	41170-115-0401	Front Tyre(At25×8-12, Brand: Carlisle)	2	
	10	41270-115-1401	Rear Tyre(At25×10-12, Brand: Carlisle)	2	
	11	41170-115-0100	Front Tyre(At25×8-12, Brand: Innova)	2	
	12	41270-115-1100	Rear Tyre(At25×10-12, Brand: Innova)	2	
	13	41170-115-0300	Front Tyre(At25×8-12, Brand: Qingda)	2	
	14	41270-115-1300	Rear Tyre(At25×10-12, Brand: Qingda)	2	
	15	41170-115-5500	Front Tyre(At26×9-12,Brand:(Zhengxin)	2	
	16	41270-115-6500	Rear Tyre(At26×11-12,Brand:(Zhengxin)	2	
	17	41170-115-5501	Front Tyre(At26×9-12,Brand:(Zhengxin)	2	
	18	41270-115-6501	Rear Tyre(At26×11-12,Brand:(Zhengxin)	2	