一、前挡风分组件（开窗,双面硬化+UV） Front Full Windshield Kit w/ Vent- Hard Coat Poly

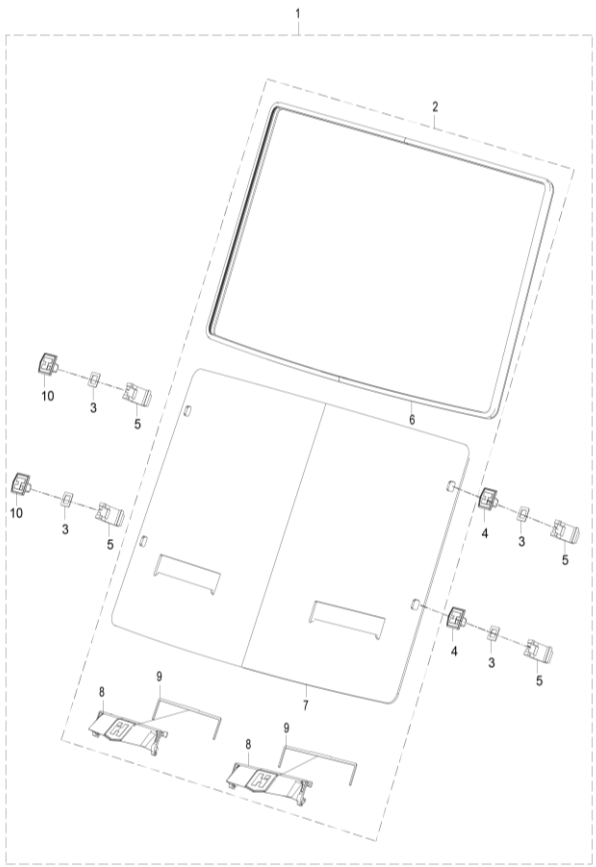

序号 No	零部件图号 PartNo.	存货编码	零部件名称及规格	Description	数量 Q'TY	备注 REMARK
1	86400-338001-0000	P338001864000000	前挡风分组件（开窗，双面硬化+UV）	Front Full Windshield Kit w/ Vent- Hard Coat Poly	1	
2	86110-338001-0000	P338001861100000	前挡风部件（开窗，双面硬化+UV）	Front Full Windshield Assy w/ Vent- Hard Coat Poly	1	
3	86118-338001-0000	P338001861180000	挡风玻璃减震垫	Windshield Damping Pad	4	
4	86312-338001-0000	P338001863120000	挡风安装抱箍L	Windshield Mounting Clamp	2	
5	86311-338001-0000	P338001863110000	挡风旋转手柄	Windshield Rotating Handle	4	
6	86802-338001-0000	P338001868020000	密封胶条A(L=3740mm)	Sealing Strip A(L=3740mm)	1	
7	86114-338001-0000	P338001861140000	前挡风玻璃（开窗，双面硬化+UV）	Front Full Windshield w/ Vent- Hard Coat Poly	1	
8	86114-338001-AB00	P33800186114AB00	通风窗口组合	Vent Assy	2	
9	86114-338001-AC00	P33800186114AC00	通风窗口密封胶条	Vent Sealing Strip	2	
10	86313-338001-0000	P338001863130000	挡风安装抱箍R	Windshield Clamp R	2	

二、前挡风分组件（开窗,无硬化+UV）Front Full Windshield Kit w/ Vent- UV Poly

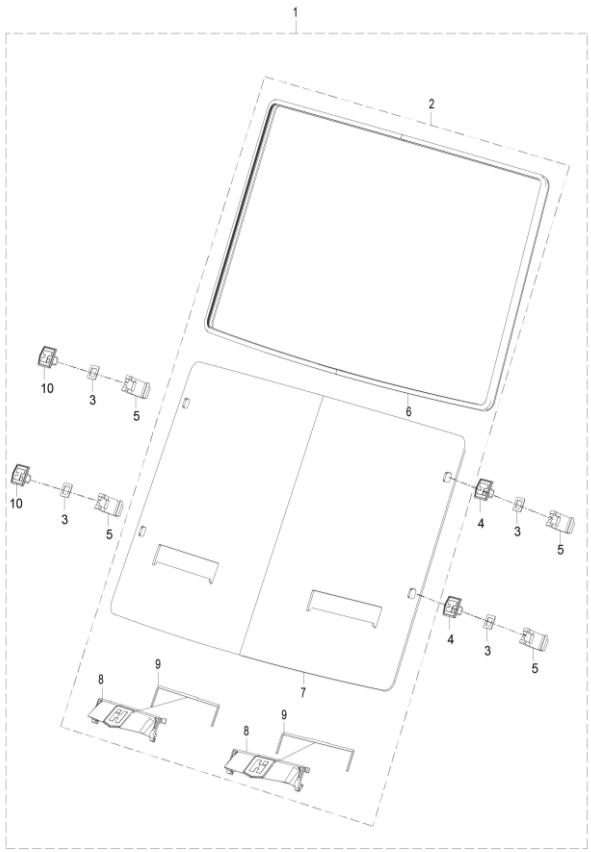

序号 No	零部件图号 PartNo.	存货编码	零部件名称及规格	Description	数量 Q'TY	备注 REMARK
1	86400-338001-0300	P338001864000300	前挡风分组件（开窗，无硬化，UV）	Front Full Windshield Kit w/ Vent- UV Poly	1	
2	86110-338001-0000	P338001861100000	前挡风部件（开窗，无硬化，UV）	Front Full Windshield Assy w/ Vent- Hard Coat Poly	1	
3	86118-338001-0000	P338001861180000	挡风玻璃减震垫	Windshield Damping Pad	4	
4	86312-338001-0000	P338001863120000	挡风安装抱箍L	Windshield Mounting Clamp	2	
5	86311-338001-0000	P338001863110000	挡风旋转手柄	Windshield Rotating Handle	4	
6	86802-338001-0000	P338001868020000	密封胶条A(L=3740mm)	Sealing Strip A(L=3740mm)	1	
7	86114-338001-0300	P338001861140300	前挡风玻璃（开窗，无硬化，UV）	#SAKNAS!	1	
8	86114-338001-AB00	P33800186114AB00	通风窗口组合	Vent Assy	2	
9	86114-338001-AC00	P33800186114AC00	通风窗口密封胶条	Vent Sealing Strip	2	
10	86313-338001-0000	P338001863130000	挡风安装抱箍R	Windshield Clamp R	2	

三、前挡风分组件（无窗，双面硬化，UV）Front Full Windshield Kit w/o Vent -Hard Coat Poly

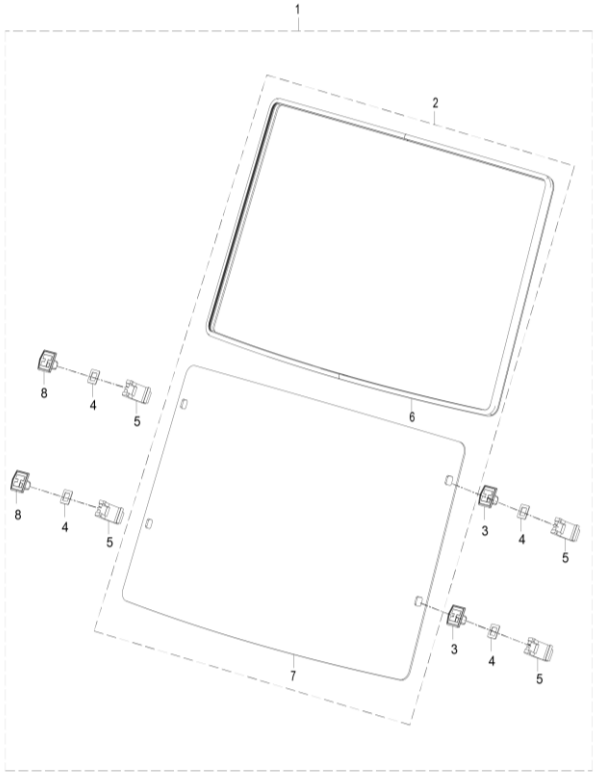

序号 No	零部件图号 PartNo.	存货编码	零部件名称及规格	Description	数量 Q'TY	备注 REMARK
1	86400-338001-0100	P338001864000100	前挡风分组件（无窗，双面硬化，UV）	Front Full Windshield Kit w/o Vent -Hard Coat Poly	1	
2	86110-338001-0100	P338001861100100	前挡风部件（无窗，双面硬化，UV）	Front Full Windshield Assy w/o Vent-Hard Coat Poly	1	
3	86312-338001-0000	P338001863120000	挡风安装抱箍L	Windshield Mounting Clamp	2	
4	86118-338001-0000	P338001861180000	挡风玻璃减震垫	Windshield Damping Pad	4	
5	86311-338001-0000	P338001863110000	挡风旋转手柄	Windshield Rotating Handle	4	
6	86802-338001-0000	P338001868020000	密封胶条A(L=3740mm)	Sealing Strip A(L=3740mm)	1	
7	86114-338001-0100	P338001861140100	前挡风玻璃（无窗，双面硬化，UV）	Front full Windshield w/o Vent-Hard Coat Poly	1	
8	86313-338001-0000	P338001863130000	挡风安装抱箍R	Windshield Clamp R	2	

四、前挡风分组件（无窗，无硬化，UV））Front Full Windshield Kit w/o Vent - UV Poly

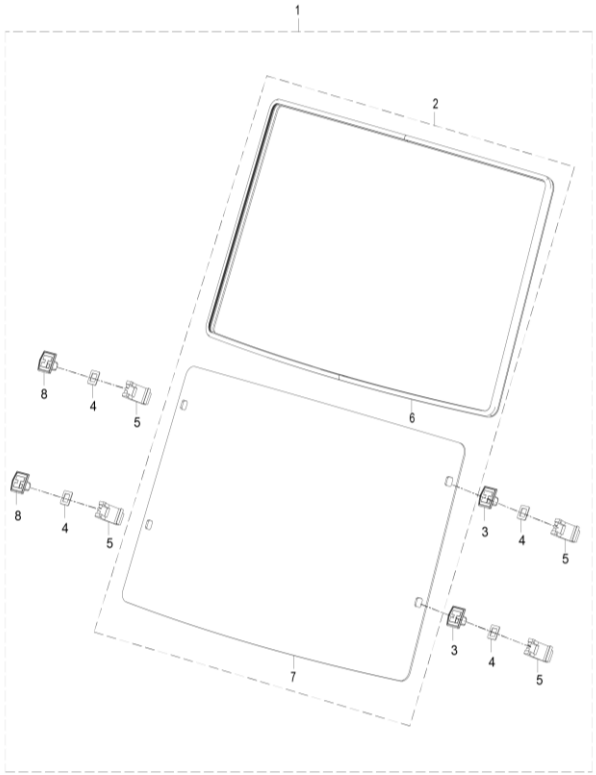

序号 No	零部件图号 PartNo.	存货编码	零部件名称及规格	Description	数量 Q'TY	备注 REMARK
1	86400-338001-0400	P338001864000400	前挡风分组件（无窗，无硬化，UV）	Front Full Windshield Kit w/o Vent - UV Poly	1	
2	86110-338001-0400	P338001861100400	前挡风部件（无窗，无硬化，UV）	Front Full Windshield Assy w/o Vent - UV Poly	1	
3	86312-338001-0000	P338001863120000	挡风安装抱箍L	Windshield Mounting Clamp	2	
4	86118-338001-0000	P338001861180000	挡风玻璃减震垫	Windshield Damping Pad	4	
5	86311-338001-0000	P338001863110000	挡风旋转手柄	Windshield Rotating Handle	4	
6	86802-338001-0000	P338001868020000	密封胶条A(L=3740mm)	Sealing Strip A(L=3740mm)	1	
7	86114-338001-0400	P338001861140400	前挡风玻璃（无窗，无硬化，UV）	Front Full Windshield w/o Vent-Hard Coat Poly	1	
8	86313-338001-0000	P338001863130000	挡风安装抱箍R	Windshield Clamp R	2	

五、前挡风分组件（开闭式，无硬化，UV） Tip Out Windsheld Kit - UV Poly

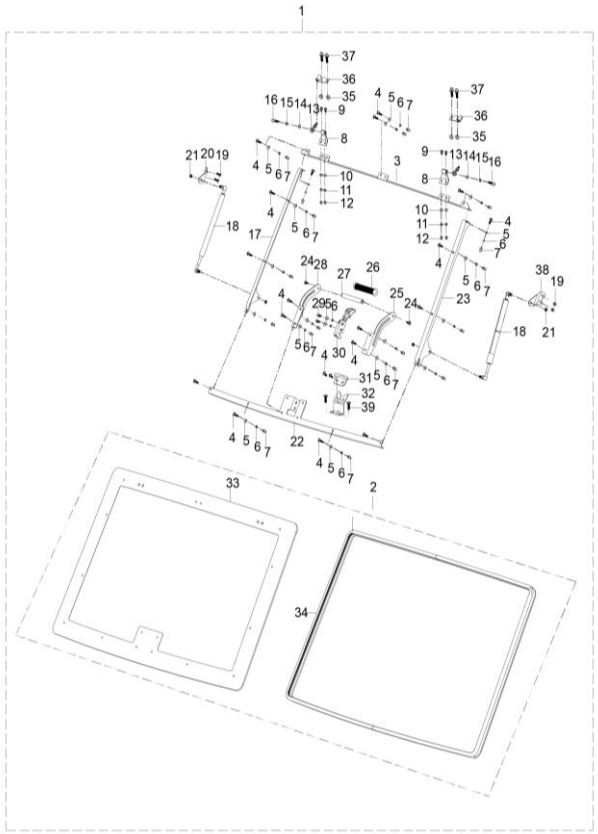

序号 No	零部件图号 PartNo.	存货编码	零部件名称及规格	Description	数量 Q'TY	备注 REMARK
1	86400-338001-0500	P338001864000500	前挡风分组件（开闭式,无硬化，UV））	Tip Out Windsheld Kit - UV Poly	1	
2	86110-338001-0500	P338001861100500	前挡风玻璃部件（开闭式,无硬化，UV））	Tip Out Windsheld - UV Poly	1	
3	8611G-338001-0000	P3380018611G0000	挡风上固定支架	Windshield Upper Bracket	1	
4	BGB70.4-M6×20	BGB70.4-M6×20	圆头带垫内六角螺栓M6×20	Hexagon Socket Screw M6×20	20	
5	GB/T96.1-6	BGB96.1-6	平垫6	Flat Washer 6	20	
6	BGB93-6	BGB93-6	弹垫6	Spring Washer 6	20	
7	90346-J00000-0000	PJ00000903460000	盖型螺母M6×14	Cap Nut M6×14	20	
8	8611A-338001-0000	P3380018611A0000	挡风铰链Ⅰ	Windshield Hinge I	2	
9	90228-J00000-0300	PJ00000902280300	圆头带垫内六角螺栓M8×25	Hexagon Socket Screw M8×25	4	
10	GB/T97.1-8	BGB97.1-8	平垫8	Flat Washer 8	4	
11	GB/T93-8	BGB93-8	弹垫8	Spring Washer 8	4	
12	GB/T923-M8	BGB923-M8	盖型螺母M8×16	Cap Nut M8×16	4	
13	8611F-338001-0000	P3380018611F0000	关节轴承NOS-8	Joint Bearing NOS-8	2	
14	GB/T97.1-8	BGB97.1-8	平垫8	Flat Washer 8	2	
15	GB/T93-8	BGB93-8	弹垫8	Spring Washer 8	2	
16	GB/T16674-M8×35	BGB16674-M8×35	六角法兰面螺栓M8×35	Hexagon Flange Bolt M8×35	2	
17	52082-338001-0000	P338001520820000	挡风右固定支架	Windshield Bracket (R)	1	
18	75296-338001-0000	P338001752960000	挡风气弹簧	Windshield Gas Spring	2	
19	BGB70.4-M6×16	BGB70.4-M6×16	圆头带垫内六角螺栓M6×16	Hexagon Socket Screw M6×16	4	
20	52088-338001-0000	P338001520880000	前挡风气弹簧安装支耳R	Mounting Lug(R),Front Windshield Gas Spring	1	
21	GB/T6182-M8	BGB6182-M8	非金属嵌件六角锁紧螺母M8	Locked Nut M8	4	
22	8611H-338001-0000	P3380018611H0000	挡风下固定支架	Windshield Lower Bracket	1	
23	52081-338001-0000	P338001520810000	挡风左固定支架	Windshield Bracket (L)	1	
24	BGB70.4-M6×12	BGB70.4-M6×12	圆头带垫内六角螺栓M6×12	Hexagon Socket Screw M6×12	2	
25	52085-338001-0000	P338001520850000	挡风手柄安装支架Ⅰ	Mounting Bracket I, Windshield Handle	1	
26	52084-338001-0000	P338001520840000	手把胶套	Handle Sleeve	1	
27	52083-338001-0000	P338001520830000	挡风手柄	Windshield Handle	1	
28	52086-338001-0000	P338001520860000	挡风手柄安装支架Ⅱ	Mounting Bracket II, Windshield Handle	1	
29	GB/T16674-M6×20	BGB16674-M6×20	六角法兰面螺栓M6×20	#SAKNAS!	2	
30	8611M-338001-0000	P3380018611M0000	挡风锁扣组合	Windshield Latch	1	

五、前挡风分组件（开闭式，无硬化，UV） Tip Out Windsheld Kit - UV Poly

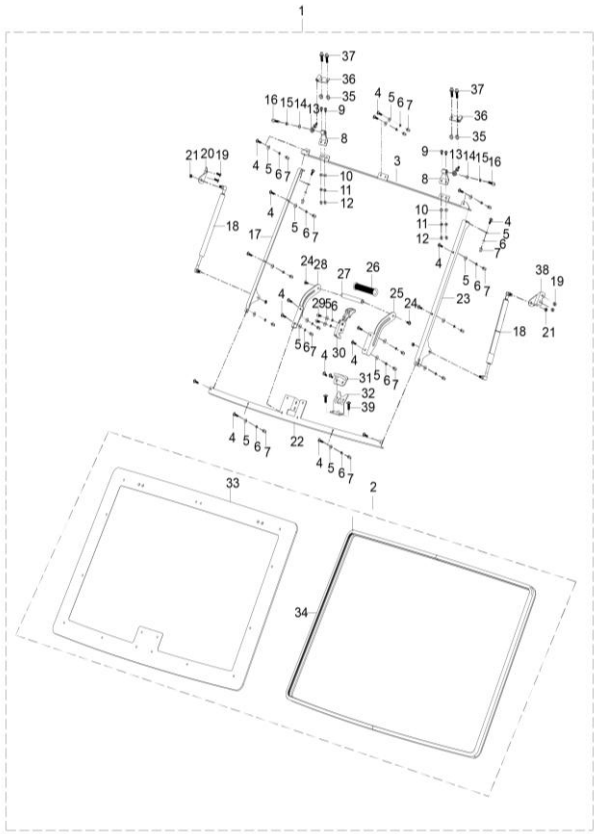

序号 No	零部件图号 PartNo.	存货编码	零部件名称及规格	Description	数量 Q'TY	备注 REMARK
31	515AS-338001-0000	P338001515AS0000	挡风固定锁钩	Windshield Fixing Hook	1	
32	515AY-338001-0000	P338001515AY0000	挡风安装支耳	Windshield Mounting Lug	1	
33	86114-338001-0500	P338001861140500	前挡风玻璃（开闭式,无硬化，UV））	#SAKNAS!	1	
34	86802-338001-0000	P338001868020000	密封胶条A(L=3740mm)	Sealing Strip A(L=3740mm)	1	
35	GB/T6182-M8	BGB6182-M8	非金属嵌件六角锁紧螺母M8	Locked Nut M8	4	
36	8611B-338001-0000	P3380018611B0000	挡风铰链 II	Windshield Hinge II	2	
37	90348-J00000-0100	PJ00000903480100	六角法兰面螺栓、弹垫和平垫组合件M8×25	Hexagon Flange Bolt Assy M8×25	4	
38	52087-338001-0000	P338001520870000	前挡风气弹簧安装支耳L	Mounting Lug(L),Front Windshield Gas Spring	1	
39	BGB70.4-M8×25	BGB70.4-M8×25	圆头带垫内六角螺栓M8×25	Hexagon Flange Bolt M8×25	2	

六、前挡风分组件（开闭式，双面硬化，UV）Tip-Out Windshield Kit -Hard Coat Poly

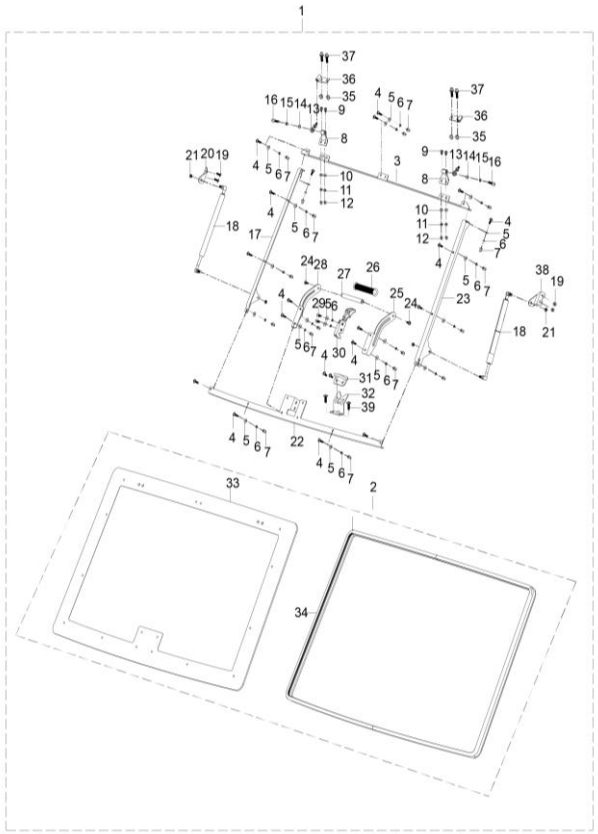

序号 No	零部件图号 PartNo.	存货编码	零部件名称及规格	Description	数量 Q'TY	备注 REMARK
1	86400-338001-0200	P338001864000200	前挡风分组件（开闭式，双面硬化，UV）	Tip-Out Windshield Kit -Hard Coat Poly	1	
2	86110-338001-0200	P338001861100200	前挡风玻璃部件（开闭式，双面硬化，UV）	Front Windshield Assy-Hard Coat Poly	1	
3	8611G-338001-0000	P3380018611G0000	挡风上固定支架	Windshield Upper Bracket	1	
4	BGB70.4-M6×20	BGB70.4-M6×20	圆头带垫内六角螺栓M6×20	Hexagon Socket Screw M6×20	20	
5	GB/T96.1-6	BGB96.1-6	平垫6	Flat Washer 6	20	
6	BGB93-6	BGB93-6	弹垫6	Spring Washer 6	20	
7	90346-J00000-0000	PJ00000903460000	盖型螺母M6×14	Cap Nut M6×14	8	
8	8611A-338001-0000	P3380018611A0000	挡风铰链Ⅰ	Windshield Hinge Ⅰ	2	
9	90228-J00000-0300	PJ00000902280300	圆头带垫内六角螺栓M8×25	Hexagon Socket Screw M8×25	4	
10	GB/T97.1-8	BGB97.1-8	平垫8	Flat Washer 8	4	
11	GB/T93-8	BGB93-8	弹垫8	Spring Washer 8	4	
12	GB/T923-M8	BGB923-M8	盖型螺母M8×16	Cap Nut M8×16	4	
13	8611F-338001-0000	P3380018611F0000	关节轴承NOS-8	Joint Bearing NOS-8	2	
14	GB/T97.1-8	BGB97.1-8	平垫8	Flat Washer 8	2	
15	GB/T93-8	BGB93-8	弹垫8	Spring Washer 8	2	
16	GB/T16674-M8×35	BGB16674-M8×35	六角法兰面螺栓M8×35	Hexagon Flange Bolt M8×35	2	
17	52082-338001-0000	P338001520820000	挡风右固定支架	Windshield Bracket (R)	1	
18	75296-338001-0000	P338001752960000	挡风气弹簧	Windshield Gas Spring	2	
19	BGB70.4-M6×16	BGB70.4-M6×16	圆头带垫内六角螺栓M6×16	Hexagon Socket Screw M6×16	4	
20	52088-338001-0000	P338001520880000	前挡风气弹簧安装支耳R	Mounting Lug(R),Front Windshield Gas Spring	1	
21	GB/T6182-M8	BGB6182-M8	非金属嵌件六角锁紧螺母M8	Locked Nut M8	4	
22	8611H-338001-0000	P3380018611H0000	挡风下固定支架	Windshield Lower Bracket	1	
23	52081-338001-0000	P338001520810000	挡风左固定支架	Windshield Bracket (L)	1	
24	BGB70.4-M6×12	BGB70.4-M6×12	圆头带垫内六角螺栓M6×12	Hexagon Socket Screw M6×12	2	
25	52085-338001-0000	P338001520850000	挡风手柄安装支架Ⅰ	Mounting Bracket I, Windshield Handle	1	
26	52084-338001-0000	P338001520840000	手把胶套	Handle Sleeve	1	
27	52083-338001-0000	P338001520830000	挡风手柄	Windshield Handle	1	
28	52086-338001-0000	P338001520860000	挡风手柄安装支架Ⅱ	Mounting Bracket II, Windshield Handle	1	
29	GB/T16674-M6×16	BGB16674-M6×16	六角法兰面螺栓M6×16	Hexagon Flange Bolt M6×16	2	
30	8611M-338001-0000	P3380018611M0000	挡风锁扣组合	Windshield Latch	1	

六、前挡风分组件（开闭式，双面硬化，UV）Tip-Out Windshield Kit -Hard Coat Poly

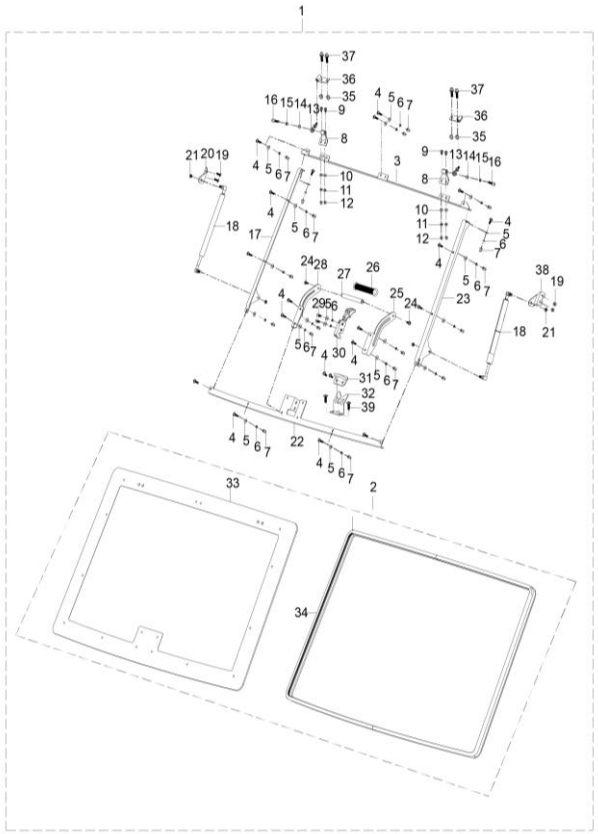

序号 No	零部件图号 PartNo.	存货编码	零部件名称及规格	Description	数量 Q'TY	备注 REMARK
31	515AS-338001-0000	P338001515AS0000	挡风固定锁钩	Windshield Fixing Hook	1	
32	515AY-338001-0000	P338001515AY0000	挡风安装支耳	Windshield Mounting Lug	1	
33	86114-338001-0200	P338001861140200	前挡风玻璃（开闭式，双面硬化，UV）	Front Windshield -Hard Coat Poly	1	
34	86802-338001-0000	P338001868020000	密封胶条A(L=3740mm)	Sealing Strip A(L=3740mm)	1	
35	GB/T6182-M8	BGB6182-M8	非金属嵌件六角锁紧螺母M8	Locked Nut M8	4	
36	8611B-338001-0000	P3380018611B0000	挡风铰链II	Windshield Hinge II	2	
37	90348-J00000-0100	PJ00000903480100	六角法兰面螺栓、弹垫和平垫组合件M8×25	Hexagon Flange Bolt Assy M8×25	4	
38	52087-338001-0000	P338001520870000	前挡风气弹簧安装支耳L	Mounting Lug(L),Front Windshield Gas Spring	1	
39	BGB70.4-M8×25	BGB70.4-M8×25	圆头带垫内六角螺栓M8×25	Hexagon Flange Bolt M8×25	2	

七、后挡风分组件（无窗，双面硬化，UV）Rear Panel Kit - Hard Coat Poly

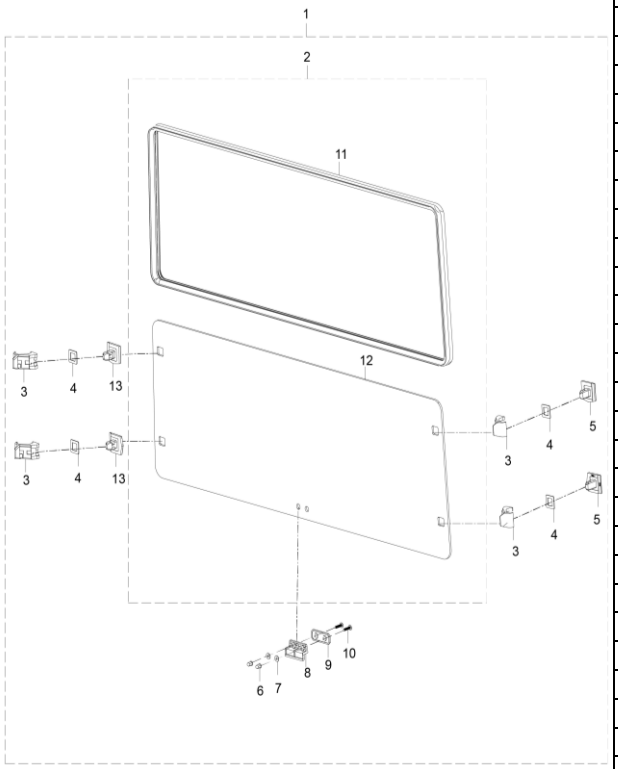

序号 No	零部件图号 PartNo.	存货编码	零部件名称及规格	Description	数量 Q'TY	备注 REMARK
1	86100-338001-0000	P338001861000000	后挡风分组件(无窗，双面硬化，UV)	Rear Panel Kit - Hard Coat Poly	1	
2	86120-338001-0000	P338001861200000	后挡风部件(无窗，无硬化，UV)	Rear Panel Assy - Hard Coat Poly	1	
3	86311-338001-0000	P338001863110000	挡风旋转手柄	Windshield Rotating Handle	4	
4	86118-338001-0000	P338001861180000	挡风玻璃减震垫	Windshield Damping Pad	4	
5	86312-338001-0000	P338001863120000	挡风安装抱箍L	Windshield Mounting Clamp	2	
6	90346-J00000-0000	PJ00000903460000	盖型螺母M6×14	Cap Nut M6×14	2	
7	GB/T96.1-6	BGB96.1-6	平垫6	Flat Washer 6	2	
8	83372-338001-0000	P338001833720000	挡风安装板	Windshield Mounting Plate	1	
9	8613C-338001-0000	P3380018613C0000	挡风安装抱箍I	Windshield Mounting Clamp I	1	
10	90228-J00000-0500	PJ00000902280500	圆头带垫内六角螺栓M6×25	Hexagon Socket Screw M6×25	2	
11	86802-338001-0100	P338001868020100	密封胶条A(L=3200mm)	Sealing Strip A(L=3200mm)	1	
12	86121-338001-0000	P338001861210000	后挡风玻璃(无窗，双面硬化，UV)	Rear Panel - Hard Coat Poly	1	
13	86313-338001-0000	P338001863130000	挡风安装抱箍R	Windshield Clamp R	2	

八、后挡风分组件（无窗，无硬化，UV）Rear Panel Kit - UV Poly

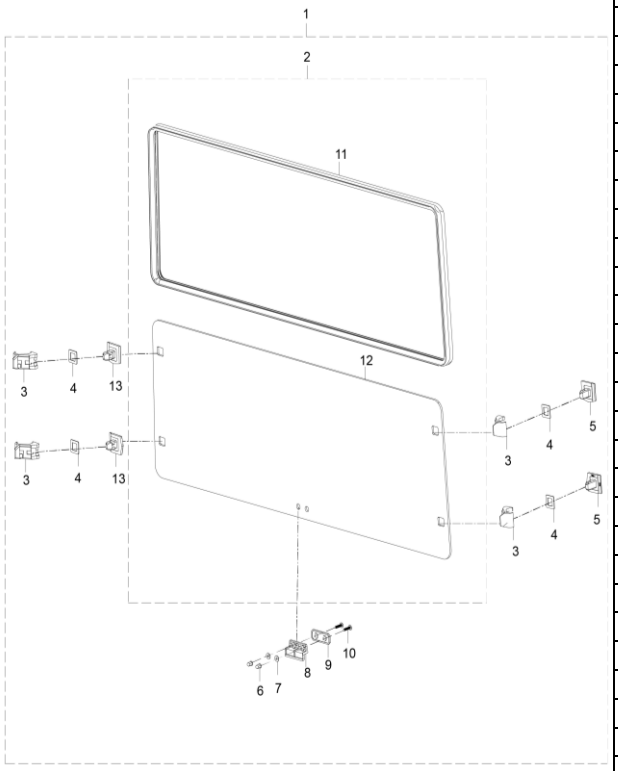

序号 No	零部件图号 PartNo.	存货编码	零部件名称及规格	Description	数量 Q'TY	备注 REMARK
1	86100-338001-0300	P338001861000300	后挡风分组件(无窗，无硬化，UV)	Rear Panel Kit - UV Poly	1	
2	86120-338001-0300	P338001861200300	后挡风部件(无窗，无硬化，UV)	Rear Panel Assy - UV Poly	1	
3	86311-338001-0000	P338001863110000	挡风旋转手柄	Windshield Rotating Handle	4	
4	86118-338001-0000	P338001861180000	挡风玻璃减震垫	Windshield Damping Pad	4	
5	86312-338001-0000	P338001863120000	挡风安装抱箍L	Windshield Mounting Clamp	2	
6	90346-J00000-0000	PJ00000903460000	盖型螺母M6×14	Cap Nut M6×14	2	
7	GB/T96.1-6	BGB96.1-6	平垫6	Flat Washer 6	2	
8	83372-338001-0000	P338001833720000	挡风安装板	Windshield Mounting Plate	1	
9	8613C-338001-0000	P3380018613C0000	挡风安装抱箍I	Windshield Mounting Clamp I	1	
10	90228-J00000-0500	PJ00000902280500	圆头带垫内六角螺栓M6×25	Hexagon Socket Screw M6×25	2	
11	86802-338001-0100	P338001868020100	密封胶条A(L=3200mm)	Sealing Strip A(L=3200mm)	1	
12	86121-338001-0300	P338001861210300	后挡风玻璃(无窗，无硬化，UV)	Rear Panel - UV Poly	1	
13	86313-338001-0000	P338001863130000	挡风安装抱箍R	Windshield Clamp R	2	

九、后挡风分组件（开窗，双面硬化，UV）Rear Panel Sliding Glass Kit- Hard Coat Poly

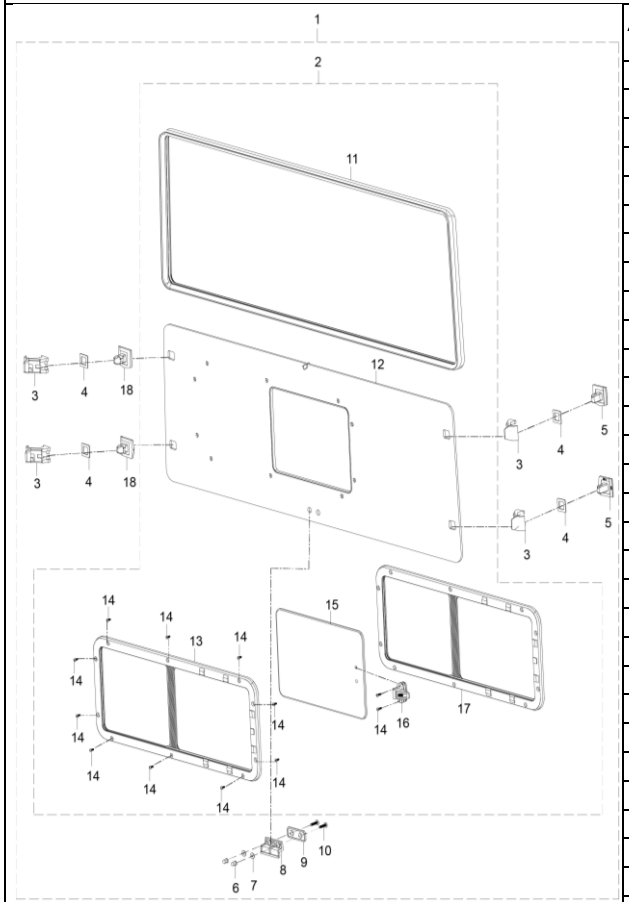

序号 No	零部件图号 PartNo.	存货编码	零部件名称及规格	Description	数量 Q'TY	备注 REMARK
1	86100-338001-0200	P338001861000200	后挡风分组件(开窗，双面硬化，UV)	Rear Panel Sliding Glass Kit- Hard Coat Poly	1	
2	86120-338001-0200	P338001861200200	后挡风组合(开窗，双面硬化，UV)	Rear Panel Sliding Glass Assy- Hard Coat Poly	1	
3	86311-338001-0000	P338001863110000	挡风旋转手柄	Windshield Rotating Handle	4	
4	86118-338001-0000	P338001861180000	挡风玻璃减震垫	Windshield Damping Pad	4	
5	86312-338001-0000	P338001863120000	挡风安装抱箍L	Windshield Mounting Clamp	2	
6	90346-J00000-0000	PJ00000903460000	盖型螺母M6×14	Cap Nut M6×14	2	
7	GB/T96.1-6	BGB96.1-6	平垫6	Flat Washer 6	2	
8	83372-338001-0000	P338001833720000	挡风安装板	Windshield Mounting Plate	1	
9	83373-338001-0000	P338001833730000	挡风安装板I	Windshield Mounting Plate I	1	
10	90228-J00000-0500	PJ00000902280500	圆头带垫内六角螺栓M6*25	Hexagon Socket Screw M6×25	2	
11	86802-338001-0100	P338001868020100	密封胶条A(L=3200mm)	Sealing Strip A(L=3200mm)	1	
12	86121-338001-0200	P338001861210200	后挡风玻璃(开窗，双面硬化，UV)	Rear Panel Sliding Glass - Hard Coat Poly	1	
13	86123-338001-AC00	P33800186123AC00	后视窗内板	Interior Plate of Sliding Glass	1	
14	GB/T845-ST4.2×13	BGB845-ST4.2×13	十字槽盘头自攻螺钉ST4.2×13	Screw ST4.2×13	12	
15	86123-338001-AB00	P33800186123AB00	窗口玻璃	Sliding Glass	1	
16	75283-338001-0000	P338001752830000	视窗锁扣	Sliding Glass Latch	1	
17	86123-338001-AD00	P33800186123AD00	后视窗外板	Exterior Plate of Sliding Glass	1	
18	86313-338001-0000	P338001863130000	挡风安装抱箍R	Windshield Clamp R	2	

十、后挡风分组件（开窗，无硬化，UV）Rear Panel Sliding Glass Kit- UV Poly

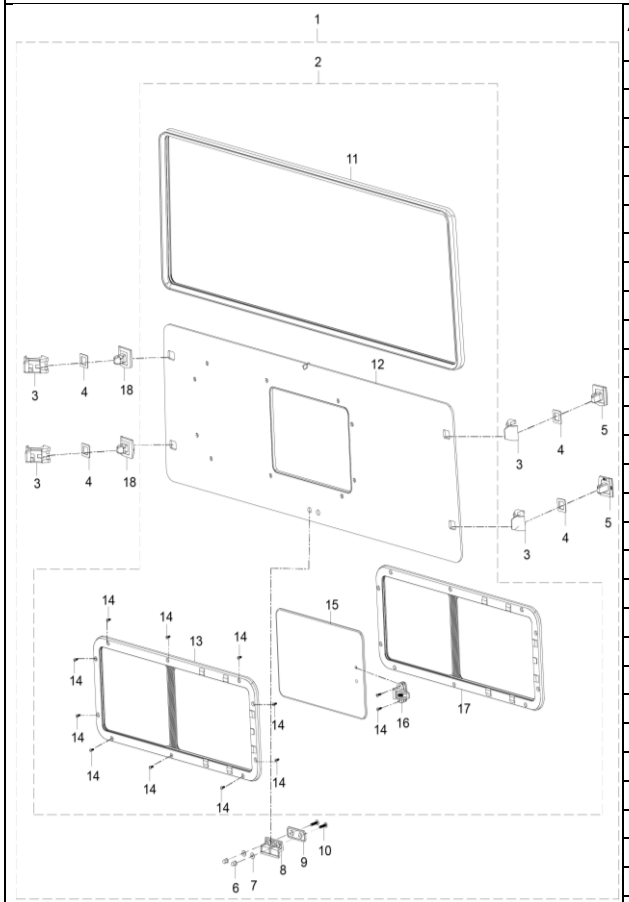

序号 No	零部件图号 PartNo.	存货编码	零部件名称及规格	Description	数量 Q'TY	备注 REMARK
1	86100-338001-0400	P338001861000400	后挡风分组件(开窗，无硬化，UV)	Rear Panel Sliding Glass Kit- UV Poly	1	
2	86120-338001-0400	P338001861200400	后挡风组合(无窗，无硬化，UV)	Rear Panel Sliding Glass Assy- UV Poly	1	
3	86311-338001-0000	P338001863110000	挡风旋转手柄	Windshield Rotating Handle	4	
4	86118-338001-0000	P338001861180000	挡风玻璃减震垫	Windshield Damping Pad	4	
5	86312-338001-0000	P338001863120000	挡风安装抱箍L	Windshield Mounting Clamp	2	
6	90346-J00000-0000	PJ00000903460000	盖型螺母M6×14	Cap Nut M6×14	2	
7	GB/T96.1-6	BGB96.1-6	平垫6	Flat Washer 6	2	
8	83372-338001-0000	P338001833720000	挡风安装板	Windshield Mounting Plate	1	
9	83373-338001-0000	P338001833730000	挡风安装板I	Windshield Mounting Plate I	1	
10	90228-J00000-0500	PJ00000902280500	圆头带垫内六角螺栓M6*25	Hexagon Socket Screw M6×25	2	
11	86802-338001-0100	P338001868020100	密封胶条A(L=3200mm)	Sealing Strip A(L=3200mm)	1	
12	86121-338001-0400	P338001861210400	后挡风玻璃(开窗，无硬化，UV)	Rear Panel Sliding Glass - UV Poly	1	
13	86123-338001-AC00	P33800186123AC00	后视窗内板	Interior Plate of Sliding Glass	1	
14	GB/T845-ST4.2×13	BGB845-ST4.2×13	十字槽盘头自攻螺钉ST4.2×13	Screw ST4.2×13	12	
15	86123-338001-AB00	P33800186123AB00	窗口玻璃	Sliding Glass	1	
16	75283-338001-0000	P338001752830000	视窗锁扣	Sliding Glass Latch	1	
17	86123-338001-AD00	P33800186123AD00	后视窗外板	Exterior Plate of Sliding Glass	1	
18	86313-338001-0000	P338001863130000	挡风安装抱箍R	Windshield Clamp R	2	

十一、带窗上车门分组件（双面硬化，UV）Front Half Doors Sliding Glass Assy (Right)- Hard Coat Poly

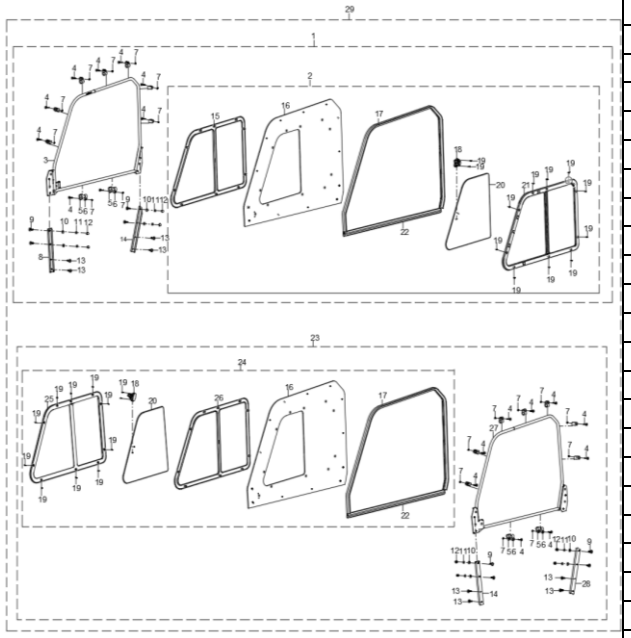

序号 No	零部件图号 PartNo.	存货编码	零部件名称及规格	Description	数量 Q'TY	备注 REMARK
1	84502-338001-0300	P338001845020300	带窗上车门分组件R(双面硬化，UV)	Front Half Doors Sliding Glass Assy (Right)- Hard Coat Poly	1	
2	84501-338001-0000	P338001845010000	带窗上车门R(双面硬化，UV)	Front Half Doors Sliding Glass (Right)- Hard Coat Poly	1	
3	51933-338001-0000	P338001519330000	右上门焊接组合Ⅱ	Front Half Doors Sliding Glass II (Right)	1	
4	90228-J00000-0500	PJ00000902280500	圆头带垫内六角螺栓M6*25	Hexagon Socket Screw M6×25	20	
5	8450J-338001-0000	P3380018450J0000	上车门安装座I	Mounting Base I, Upper Door	20	
6	8450K-338001-0000	P3380018450K0000	上车门安装座II	Mounting Base II, Upper Door	20	
7	GB/T6170-M6	BGB6170-M6	六角螺母M6	Hexagon Nut M6	20	
8	515AU-338001-0000	P338001515AU0000	上门安装板Ⅰ	Mounting Plate I, Upper Door	2	
9	90228-J00000-0300	PJ00000902280300	圆头带垫内六角螺栓M8*25	Hexagon Socket Screw M8×25	8	
10	GB/T97.1-8	BGB97.1-8	平垫8	Flat Washer 8	8	
11	GB/T 93-8	BGB93-8	弹垫8	Spring Washer 8	8	
12	GB/T923-M8	BGB923-M8	盖型螺母M8×16	Cap Nut M8×16	8	
13	90228-J00000-0300	PJ00000902280300	圆头带垫内六角螺栓M8*25	Hexagon Socket Screw M8×25	8	
14	515AX-338001-0000	P338001515AX0000	上门安装板R	Mounting Plate (R), Upper Door	1	
15	75295-338001-0000	P338001752950000	上门视窗外板R	Exterior Plate R of Sliding Glass,Upper Door	1	
16	75290-338001-0000	P338001752900000	上车门玻璃Ⅱ(双面硬化，UV)	Sliding Glass Ⅱ- Hard Coat Poly	2	
17	86802-338001-0200	P338001868020200	密封胶条A(L=2010mm)	Sealing Strip A(L=2010mm)	2	
18	75283-338001-0000	P338001752830000	滑窗锁扣	Sliding Glass Latch	2	
19	GB/T845-ST4.2×13	BGB845-ST4.2×13	十字槽盘头自攻螺钉ST4.2×13	Screw ST4.2×13	24	
20	75281-338001-0000	P338001752810000	上门滑窗	Sliding Window	2	
21	75291-338001-0000	P338001752910000	上门视窗内板R	Interior Plate R of Sliding Glass	1	
22	86805-338001-0000	P338001868050000	密封胶条D(L=960mm)	Sealing Strip D(L=960mm)	2	
23	84501-338001-0300	P338001845010300	带窗上车门分组件L(双面硬化，UV)	Front Half Doors Sliding Glass Assy (Left)- Hard Coat Poly	1	
24	84502-338001-0000	P338001845020000	带窗上车门L(双面硬化，UV)	Front Half Doors Sliding Glass (Left)- Hard Coat Poly	1	
25	75282-338001-0000	P338001752820000	上门视窗内板L	Interior Plate L of Sliding Glass	1	
26	75294-338001-0000	P338001752940000	上门视窗外板L	Exterior Plate L of Sliding Glass	1	
27	51932-338001-0000	P338001519320000	左上门焊接组合Ⅱ	Front Half Doors Sliding Glass II (Left)	1	
28	515AW-338001-0000	P338001515AW0000	上门安装板L	Mounting Plate (L), Upper Door	1	
29	845A1-338001-0300	P338001845A10300	带窗上车门分组件(双面硬化,UV)	Front Half Doors Sliding Glass Kit- Hard Coat Poly	1	

十二、带窗上车门分组件（无硬化，UV）Front Half Doors Sliding Glass Assy- UV Poly

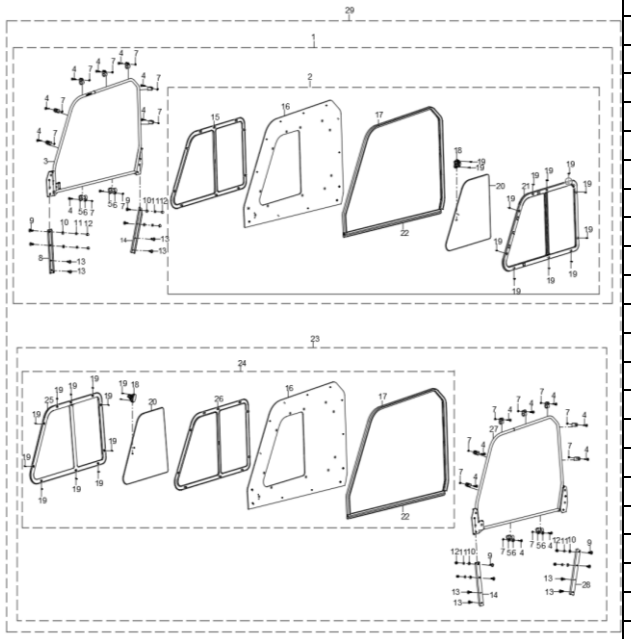

序号 No	零部件图号 PartNo.	存货编码	零部件名称及规格	Description	数量 Q'TY	备注 REMARK
1	84501-338001-0400	P338001845010400	带窗上车门分组件R(无硬化，UV)	Front Half Doors Sliding Glass Assy (Right)- UV Poly	1	
2	84501-338001-0700	P338001845010700	带窗上车门R(无硬化，UV)	Front Half Doors Sliding Glass (Right)-UV Poly	1	
3	51933-338001-0000	P338001519330000	右上门焊接组合Ⅱ	Front Half Doors Sliding Glass II (Right)	1	
4	90228-J00000-0500	PJ00000902280500	圆头带垫内六角螺栓M6*25	Hexagon Socket Screw M6×25	20	
5	8450J-338001-0000	P3380018450J0000	上车门安装座I	Mounting Base I, Upper Door	20	
6	8450K-338001-0000	P3380018450K0000	上车门安装座II	Mounting Base II, Upper Door	20	
7	GB/T6170-M6	BGB6170-M6	六角螺母M6	Hexagon Nut M6	20	
8	515AU-338001-0000	P338001515AU0000	上门安装板Ⅰ	Mounting Plate I, Upper Door	2	
9	90228-J00000-0300	PJ00000902280300	圆头带垫内六角螺栓M8*25	Hexagon Socket Screw M8×25	8	
10	GB/T97.1-8	BGB97.1-8	平垫8	Flat Washer 8	8	
11	GB/T 93-8	BGB93-8	弹垫8	Spring Washer 8	8	
12	GB/T923-M8	BGB923-M8	盖型螺母M8×16	Cap Nut M8×16	8	
13	90228-J00000-0300	PJ00000902280300	圆头带垫内六角螺栓M8*25	Hexagon Socket Screw M8×25	8	
14	515AX-338001-0000	P338001515AX0000	上门安装板R	Mounting Plate (R), Upper Door	1	
15	75295-338001-0000	P338001752950000	上门视窗外板R	Exterior Plate R of Sliding Glass,Upper Door	1	
16	75290-338001-0600	P338001752900600	上车门玻璃Ⅱ(无硬化，UV)	Sliding Glass Ⅱ- UV Poly	2	
17	86802-338001-0200	P338001868020200	密封胶条A(L=2010mm)	Sealing Strip A(L=2010mm)	2	
18	75283-338001-0000	P338001752830000	滑窗锁扣	Sliding Glass Latch	2	
19	GB/T845-ST4.2×13	BGB845-ST4.2×13	十字槽盘头自攻螺钉ST4.2×13	Screw ST4.2×13	24	
20	75281-338001-0000	P338001752810000	上门滑窗	Sliding Window	2	
21	75291-338001-0000	P338001752910000	上门视窗内板R	Interior Plate R of Sliding Glass	1	
22	86805-338001-0000	P338001868050000	密封胶条D(L=960mm)	Sealing Strip D(L=960mm)	2	
23	84502-338001-0400	P338001845020400	带窗上车门分组件L(无硬化，UV)	Front Half Doors Sliding Glass Assy (Left)- UV Poly	1	
24	84501-338001-0600	P338001845010600	带窗上车门L(无硬化，UV)	Front Half Doors Sliding Glass (Left)- UV Poly	1	
25	75282-338001-0000	P338001752820000	上门视窗内板L	Interior Plate L of Sliding Glass	1	
26	75294-338001-0000	P338001752940000	上门视窗外板L	Exterior Plate L of Sliding Glass	1	
27	51932-338001-0000	P338001519320000	左上门焊接组合Ⅱ	Front Half Doors Sliding Glass II (Left)	1	
28	515AW-338001-0000	P338001515AW0000	上门安装板L	Mounting Plate (L), Upper Door	1	
29	845A1-338001-0400	P338001845A10400	带窗上车门分组件(无硬化，UV)	Front Half Doors Sliding Glass Kit- UV Poly	1	

十三、不带窗上车门分组件（双面硬化，UV）Front Half Doors Assy - Hard Coat Poly

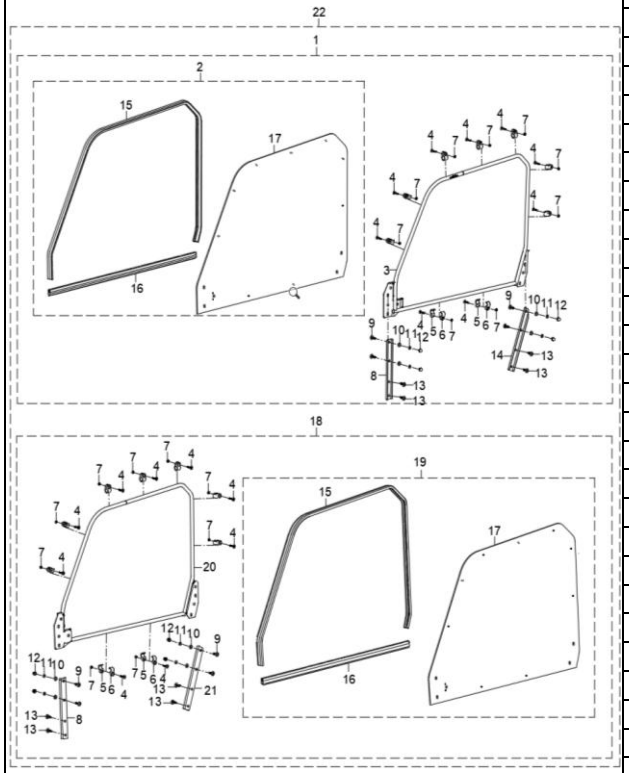

序号 No	零部件图号 PartNo.	存货编码	零部件名称及规格	Description	数量 Q'TY	备注 REMARK
1	84502-338001-0100	P338001845020100	不带窗上车门分组件R(双面硬化，UV)	Front Half Doors Assy (R) - Hard Coat Poly	1	
2	8450D-338001-0000	P3380018450D0000	不带窗上门R(双面硬化，UV)	Front Half Doors (R) - Hard Coat Poly	1	
3	51933-338001-0000	P338001519330000	右上门焊接组合Ⅱ	Front Half Doors Sliding Glass II (Right)	1	
4	90228-J00000-0500	PJ00000902280500	圆头带垫内六角螺栓M6*25	Hexagon Socket Screw M6×25	20	
5	8450J-338001-0000□	P3380018450J0000	上车门安装座I	Mounting Base I, Upper Door	20	
6	8450K-338001-0000	P3380018450K0000	上车门安装座II	Mounting Base II, Upper Door	20	
7	GB/T6170-M6	BGB6170-M6	六角螺母M6	Hexagon Nut M6	20	
8	515AU-338001-0000	P338001515AU0000	上门安装板Ⅰ	Mounting Plate I, Upper Door	2	
9	90228-J00000-0300	PJ00000902280300	圆头带垫内六角螺栓M8*25	Hexagon Socket Screw M8×25	8	
10	GB/T97.1-8	BGB97.1-8	平垫8	Flat Washer 8	8	
11	GB/T 93-8	BGB93-8	弹垫8	Spring Washer 8	8	
12	GB/T923-M8	BGB923-M8	盖型螺母M8×16	Cap Nut M8×16	8	
13	90228-J00000-0300	PJ00000902280300	圆头带垫内六角螺栓M8*25	Hexagon Socket Screw M8×25	8	
14	515AX-338001-0000	P338001515AX0000	上门安装板R	Mounting Plate (R), Upper Door	1	
15	86802-338001-0200	P338001868020200	密封胶条A(L=2010mm)	Sealing Strip A(L=2010mm)	2	
16	86805-338001-0000	P338001868050000	密封胶条D(L=960mm)	Sealing Strip D(L=960mm)	2	
17	8450D-338001-AA00	P3380018450DAA00	上车门玻璃Ⅰ(双面硬化，UV)	Upper Door Glass - Hard Coat Poly	2	
18	84501-338001-0100	P338001845010100	不带窗上车门分组件L(双面硬化，UV)	Front Half Doors Assy (L) - Hard Coat Poly	1	
19	8450C-338001-0000	P3380018450C0000	不带窗上门L(双面硬化，UV)	Front Half Doors (L) - Hard Coat Poly	1	
20	51932-338001-0000	P338001519320000	左上门焊接组合Ⅱ	Front Half Doors Sliding Glass II (Left)	1	
21	515AW-338001-0000	P338001515AW0000	上门安装板L	Mounting Plate (L), Upper Door	1	
22	845A1-338001-0100	P338001845A10100	不带窗上车门分组件（双面硬化,UV）	Front Half Doors Kit - Hard Coat Poly	1	

十四、不带窗上车门分组件（无硬化，UV）Front Half Doors Assy - UV Poly

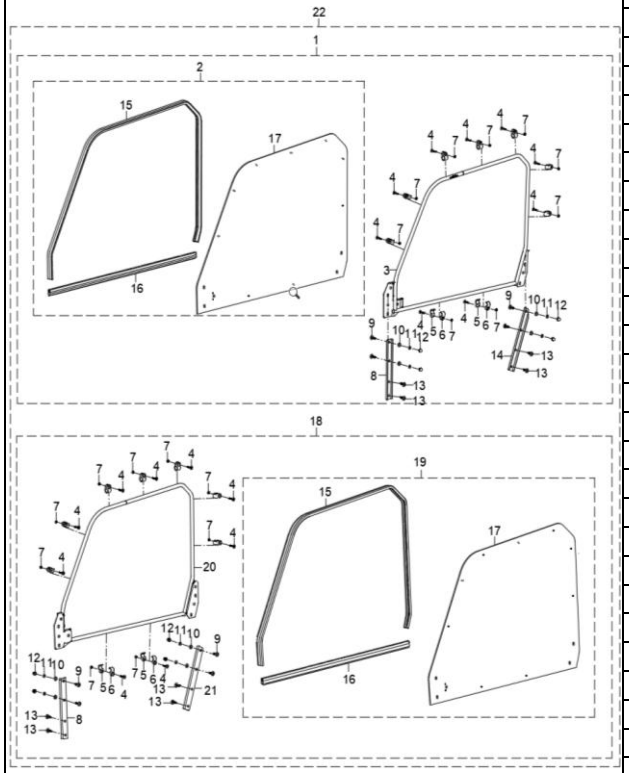

序号 No	零部件图号 PartNo.	存货编码	零部件名称及规格	Description	数量 Q'TY	备注 REMARK
1	84502-338001-0500	P338001845020500	不带窗上车门分组件R(无硬化，UV)	Front Half Doors Assy (R) - UV Poly	1	
2	8450F-338001-0000	P3380018450F0000	不带窗上门R(无硬化，UV)	Front Half Doors (R) - UV Poly	1	
3	51933-338001-0000	P338001519330000	右上门焊接组合Ⅱ	Front Half Doors Sliding Glass II (Right)	1	
4	90228-J00000-0500	PJ00000902280500	圆头带垫内六角螺栓M6*25	Hexagon Socket Screw M6×25	20	
5	8450J-338001-0000□	P3380018450J0000	上车门安装座I	Mounting Base I, Upper Door	20	
6	8450K-338001-0000	P3380018450K0000	上车门安装座II	Mounting Base II, Upper Door	20	
7	GB/T6170-M6	BGB6170-M6	六角螺母M6	Hexagon Nut M6	20	
8	515AU-338001-0000	P338001515AU0000	上门安装板Ⅰ	Mounting Plate I, Upper Door	2	
9	90228-J00000-0300	PJ00000902280300	圆头带垫内六角螺栓M8*25	Hexagon Socket Screw M8×25	8	
10	GB/T97.1-8	BGB97.1-8	平垫8	Flat Washer 8	8	
11	GB/T 93-8	BGB93-8	弹垫8	Spring Washer 8	8	
12	GB/T923-M8	BGB923-M8	盖型螺母M8×16	Cap Nut M8×16	8	
13	90228-J00000-0300	PJ00000902280300	圆头带垫内六角螺栓M8*25	Hexagon Socket Screw M8×25	8	
14	515AX-338001-0000	P338001515AX0000	上门安装板R	Mounting Plate (R), Upper Door	1	
15	86802-338001-0200	P338001868020200	密封胶条A(L=2010mm)	Sealing Strip A(L=2010mm)	2	
16	86805-338001-0000	P338001868050000	密封胶条D(L=960mm)	Sealing Strip D(L=960mm)	2	
17	8450D-338001-AB00	P3380018450DAB00	上车门玻璃Ⅰ(无硬化，UV)	Upper Door Glass - UV Poly	2	
18	84501-338001-0500	P338001845010500	不带窗上车门分组件L(无硬化，UV)	Front Half Doors Assy (L) - UV Poly	1	
19	8450E-338001-0000	P3380018450E0000	不带窗上门L(无硬化，UV)	Front Half Doors (L) - UV Poly	1	
20	51932-338001-0000	P338001519320000	左上门焊接组合Ⅱ	Front Half Doors Sliding Glass II (Left)	1	
21	515AW-338001-0000	P338001515AW0000	上门安装板L	Mounting Plate (L), Upper Door	1	
22	845A1-338001-0500	P338001845A10500	不带窗上车门分组件（无硬化,UV）	Front Half Doors Kit - UV Poly	1	

十五、护网上车门分组件Front Half Door Assy– Soft

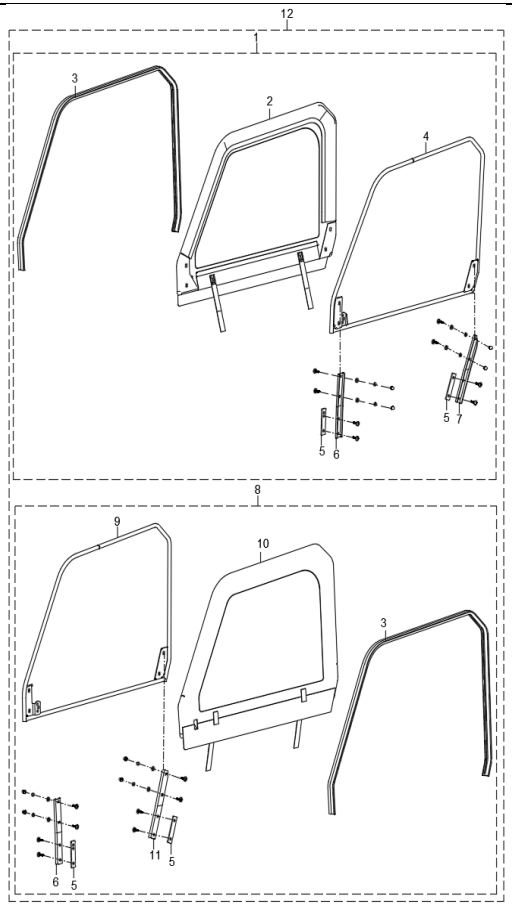

序号 No	零部件图号 PartNo.	存货编码	零部件名称及规格	Description	数量 Q'TY	备注 REMARK
1	84502-338001-0200	P338001845020200	护网上车门分组件R	Front Half Door Assy(R)– Soft	1	
2	75250-338001-0000	P338001752500000	车门右护网	Front Half Door Net (R)– Soft	1	
3	86803-338001-0200	P338001868030200	密封胶条B(L=2630mm)	Sealing Strip B (L=2630mm)	1	
4	51926-338001-0000	P338001519260000	右上门焊接组合Ⅰ	Front Half Door Weld Assembly (R) Ⅰ	1	
5	515AV-338001-0000	P338001515AV0000	上门安装板Ⅱ	Mounting Plate II, Front Half Door	4	
6	515AU-338001-0000	P338001515AU0000	上门安装板Ⅰ	Mounting Plate I, Upper Door	2	
7	515AX-338001-0000	P338001515AX0000	上门安装板R	Mounting Plate (R), Upper Door	1	
8	84501-338001-0200	P338001845010200	护网上车门分组件L	Front Half Door Assy(L)– Soft	1	
9	51925-338001-0000	P338001519250000	左上门焊接组合Ⅰ	Front Half Door Weld Assembly (L) Ⅰ	1	
10	75240-338001-0000	P338001752400000	车门左护网	Front Half Door Net (L)– Soft	1	
11	515AW-338001-0000	P338001515AW0000	上门安装板L	Mounting Plate (L), Upper Door	1	
12	845A1-338001-0200	P338001845A10200	护网上车门分组件	Front Half Doors Zip Window Kit- Framed Canvas	1	

十六、护杠分组件Step Bar Kit

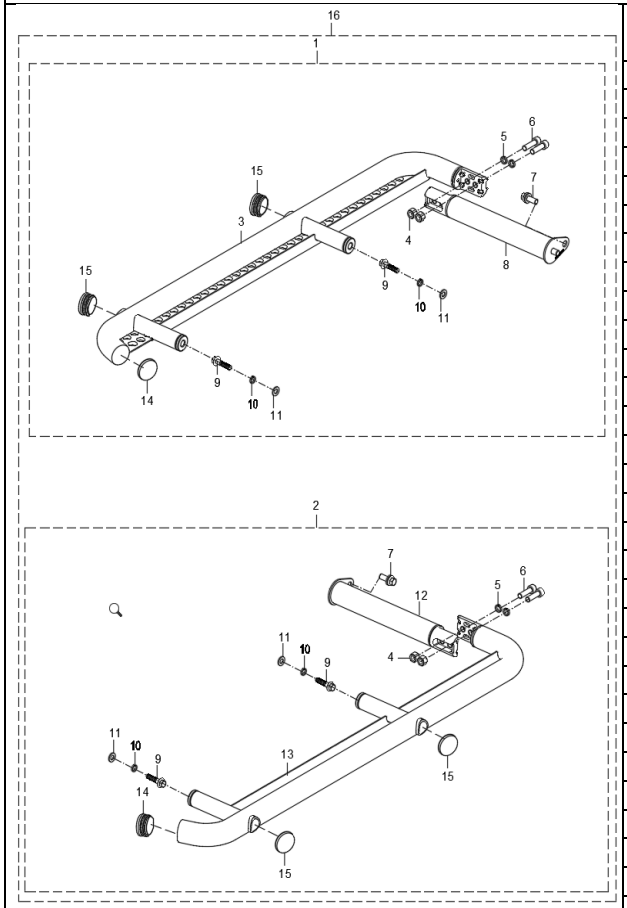

序号 No	零部件图号 PartNo.	存货编码	零部件名称及规格	Description	数量 Q'TY	备注 REMARK
1	51650-338001-0000	P338001516500000	护杠分组件R	Step Bar Kit (R)	1	
2	51600-338001-0000	P338001516000000	护杠分组件L	Step Bar Kit(L)	1	
3	51660-338001-0000	P338001516600000	右侧护杠焊接组合I	Right Step Bar Weld assembly Ⅰ	1	
4	GB/T889.1-M10×1.5	BGB889.2-M10×1.25	非金属嵌件六角锁紧螺母M10×1.25	Locked Nut M10×1.25	2	
5	GB/T93-10	BGB93-10	弹垫10	Spring Washer 10	4	
6	GB/T70.1-M10×1.25×35	BGB70.1-M10×1.25×35	内六角圆柱头螺钉M10×1.25×35	Hexagon Socket Screw M10×1.25×35	4	
7	90348-J00000-0400	PJ00000903480400	六角法兰面螺栓、弹垫和平垫组合件M10×26	Hexagon Flange Bolt Assy M10×26	2	
8	8611K-338001-0000	P3380018611K0000	侧护杠焊接组合II	Step Bar Kit Weld Assembly II	1	
9	GB/T16674-M10×1.25×40	BGB16674-M10×1.25×40	六角法兰面螺栓M10×40	Hexagon Flange Bolt M10×40	4	
10	GB/T93-10	BGB93-10	弹垫10	Spring Washer 10	4	
11	GB/T97.1-10	BGB97.1-10	平垫10	Flat Washer 10	4	
12	51601-338001-0000	P338001516010000	侧护杠焊接组合II	Step Bar Kit Weld Assembly II	1	
13	51610-338001-0000	P3380015161000000	左侧护杠焊接组合I	Left Step Bar Weld assembly Ⅰ	1	
14	92440-J00000-0600	pJ00000924400600	圆形塑料堵头Φ44	Round Plug Φ44	2	
15	92440-J00000-0700	PJ00000924400700	圆形塑料堵头Φ30	Round Plug Φ30	4	
16	516A0-338001-0000	P338001516A00000	护杠分组件	Step Rails Kit- 2 Seater	1	

十七、后保险杠分组件Rear Bumper

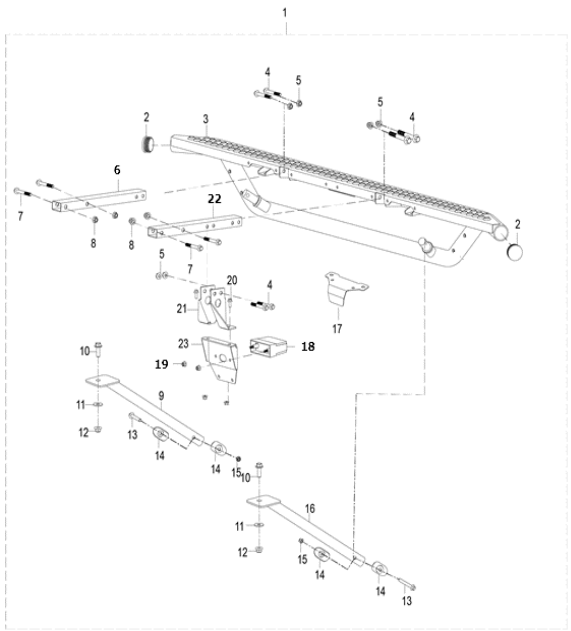

序号 No	零部件图号 PartNo.	存货编码	零部件名称及规格	Description	数量 Q'TY	备注 REMARK
1	51400-333006-1000	P333006514001000	后保险杠分组件	Rear Bumper	1	
2	92440-J00000-0600	pJ00000924400600	圆形塑料堵头Φ44	Round Plug Φ44	2	
3	51400-333006-0000	P333006514000000	后保险杠焊接组合	Rear Bumper Welding Assy	1	
4	GB/T 16674-M8×60	BGB16674-M8×60	六角法兰面螺栓M8×60	Hexagon Flange Bolt M8×60	6	
5	GB/T6183.2-M8	BGB6183.2-M8	非金属嵌件六角法兰面锁紧螺母M8	Locked Nut M8	6	
6	51404-333006-0000	P333006514040000	后保险杠上安装管	Rear Bumper Upper Mounting Pipe	1	
7	GB/T16674-M10×1.25×65	BGB16674-M10×1.25×65	六角法兰面螺栓M10×65	Hexagon Flange Bolt M10×65	4	
8	GB/T6183.2-M10×1.25	BGB6183.2-M10×1.25	非金属嵌件六角法兰面锁紧螺母M10×1.25	Locked Nut M10×1.25	4	
9	514003-338001-0000	P338001514030000	后保险杠下安装管R	Lower Mounting Tube(R), Rear Bumper	1	
10	GB/T16674-M10×30	BGB16674-M10×30	六角法兰面螺栓M10×30	Hexagon Flange Bolt M10×30	2	
11	90605-J00000-0100	PJ00000906050100	平垫φ10×φ28×2	Flat Washer φ10×φ28×2	2	
12	GB/T6183.2-M10×1.25	BGB6183.2-M10×1.25	非金属嵌件六角法兰面锁紧螺母M10×1.25	Locked Nut M10×1.25	2	
13	GB/T 16674-M8×50	BGB16674-M8×50	六角法兰面螺栓M8×50	Hexagon Flange Bolt M8×50	2	
14	51586-338001-0100	P338001515860100	弧形垫	Curved Pad	4	
15	GB/T6183.2-M8	BGB6183.2-M8	非金属嵌件六角法兰面锁紧螺母M8	Locked Nut M8	2	
16	51402-338001-0000	P338001514020000	后保险杠下安装管L	Lower Mounting Tube (L), Rear Bumper	1	
17	51405-338001-0000	P338001514050000	摄像头隔热板	Camera Mounting Plate	1	
18	35325-311001-0000	P311001353250000	后牌照灯组合	License Light Assy	1	
19	GB/T6183.2-M6	BGB6183.2-M6	非金属嵌件六角法兰面锁紧螺母M6	Locked Nut M6	4	
20	GB/T16674-M6×16	BGB16674-M6×16	六角法兰面螺栓M6×16	Hexagon Flange Bolt M6×16	2	
21	51538-333006-0000	P333006515380000	牌照安装板Ⅱ	License Plate Mounting Plate Ⅱ	1	
22	51404-338001-0000	P338001514040000	后保险杠上安装管	Upper Mounting Tube,Rear Bumper	1	
23	51537-333006-0000	P333006515370000	牌照安装板Ⅰ	License Plate Mounting Plate Ⅰ	1	

十八、前货架分组件Hood Rack Kit

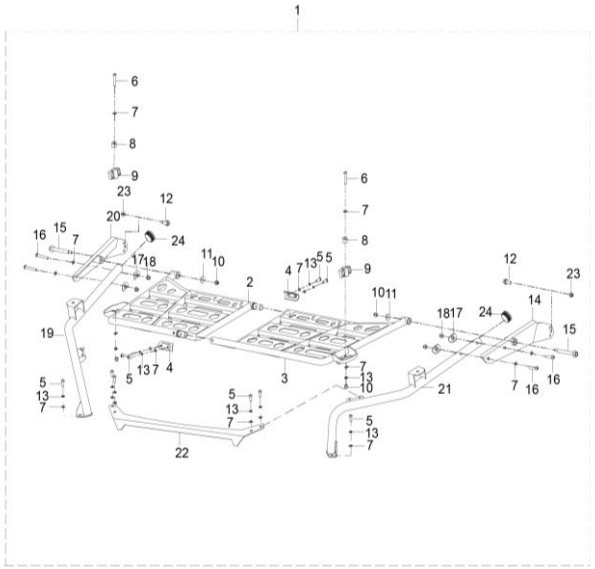

序号 No	零部件图号 PartNo.	存货编码	零部件名称及规格	Description	数量 Q'TY	备注 REMARK
1	51350-338001-0000	P338001513500000	前货架分组件	Hood Rack Kit	1	
2	51352-338001-0000	P338001513520000	前货架焊接组合R	Hood Rack Weld Assembly (R)	1	
3	51535-333007-0000	P333007515350000	前货架焊接组合L	Hood Rack Weld Assembly (L)	1	
4	51537-338001-0000	P338001515370000	前货架连接板Ⅱ	Connecting Plate II,Hood Rack	2	
5	BGB70.2-M8×20	GB/T70.2-M8×20	内六角平圆头螺钉M8×20	Hexagon Socket Screw M8×20	8	
6	90121000001,00	90121000001,00	圆头带垫内六角螺栓M8*45	Bolt M8*45	2	
7	GB/T97.1-8	BGB97.1-8	平垫8	Flat Washer 8	10	
8	91301100002,00	91301100002,00	锁扣减震胶	Latch Rubber Damping	2	
9	51539-338001-0000	P338001515390000	锁扣手柄	Latch Knob	2	
10	90346-J00000-0300	PJ00000903460300	盖型螺母M8×22	Nuts M8×22	2	
11	GB/T97.1-8	BGB97.1-8	平垫φ8×φ24×2	Flat Washer 8	2	
12	90348-J00000-0500	PJ00000903480500	六角法兰面螺栓、弹垫和平垫组合件M10×28	Bolts & Washer Assembly M10×28	2	
13	GB/T 93-8	BGB93-8	弹垫8	Spring Washer 8	10	
14	51532-338001-0000	P338001515320000	前货架连接板焊接组合L	Connecting Plate(L),Hood Rack	1	
15	90117100002,00	90117100002,00	六角法兰面台阶螺栓M8*18-φ11.8*97	Hexagon Flange Step Bolt M8×18-φ11.8×97	2	
16	GB/T16674-M8×55	BGB16674-M8×55	六角法兰面螺栓M8×55	Hexagon Flange Step Bolt M8×55	4	
17	51538-338001-0000	P338001515380000	前货架连接板Ⅲ	Connecting Plate III,Hood Rack	4	
18	GB/T6183.2-M8	BGB6183.2-M8	非金属嵌件六角法兰面锁紧螺母M8	Locked Nut M8	4	
19	51536-338001-0000	P338001515360000	前货架连管焊接组合R	Connecting Pipe(R),Hood Rack	1	
20	51533-338001-0000	P338001515330000	前货架连接板焊接组合R	Connecting Plate(R),Hood Rack	1	
21	51535-338001-0000	P338001515350000	前货架连管焊接组合L	Connecting Pipe(L),Hood Rack	1	
22	51531-338001-0000	P338001515310000	前货架连接板Ⅰ	Connecting Plate I,Hood Rack	1	
23	GB/T6183.2-M10×1.25	BGB6183.2-M10×1.25	非金属嵌件六角法兰面锁紧螺母M10×1.25	Locked Nut M10×1.25	2	
24	92440-J00000-0100	PJ00000924400100	圆形塑料堵头Φ32	Round Plug Φ32	2	

十九、后行李架组件Rear Rack Kit

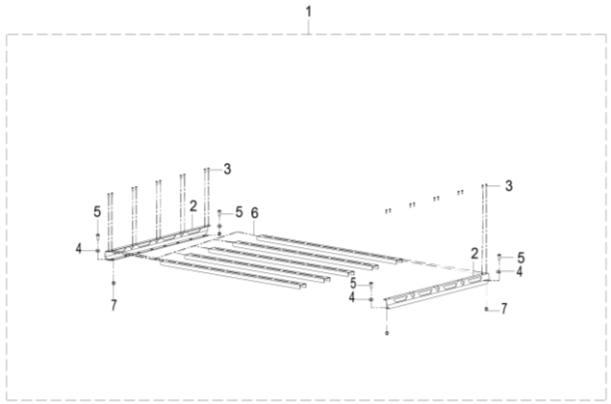

序号 No	零部件图号 PartNo.	存货编码	零部件名称及规格	Description	数量 Q'TY	备注 REMARK
1	55240-338001-0000	P338001552400000	后行李架组件	Rear Rack Kit	1	
2	515BJ-338001-0000	P338001515BJ0000	货架固定板III	Mounting Plate III,Rear Rack	2	
3	BGB70.2-M6×16	GB/T70.2-M6×16	内六角平圆头螺钉M6×16	Hexagon Socket Screw M6×16	20	
4	90605-J00000-0300	PJ00000906050300	平垫φ10×φ25×3	Flat Washer φ10×φ25×3	4	
5	BGB70.2-M10×1.25×25	GB/T70.2-M10×1.25×25	内六角平圆头螺钉M10×1.25×25	Hexagon Socket Screw M10×1.25×25	4	
6	515BK-338001-0000	P338001515BK0000	货架固定板Ⅳ	Mounting Plate IV,Rear Rack	5	
7	GB/T6183.2-M10×1.25	BGB6183.2-M10×1.25	非金属嵌件六角法兰面锁紧螺母M10×1.25	Locked Nut M10×1.25	4	

二十、后货架分组件Rear Rack Kit

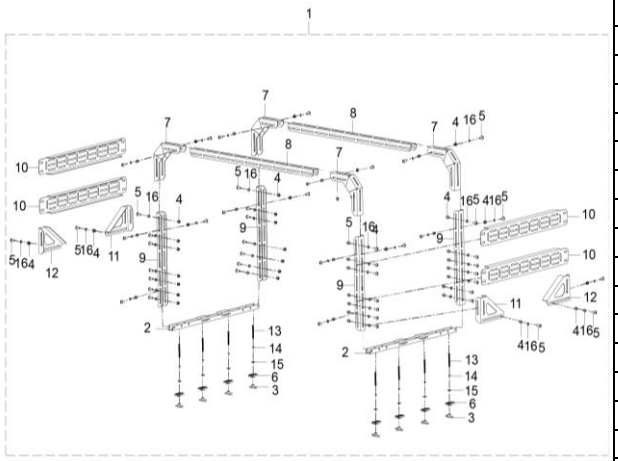

序号 No	零部件图号 PartNo.	存货编码	零部件名称及规格	Description	数量 Q'TY	备注 REMARK
1	51470-338001-0000	P338001514700000	后货架分组件	Rear Rack Kit	1	
2	515BH-338001-0000	P338001515BH0000	货架固定板Ⅱ	Mounting Plate II,Rear Rack Basket	2	
3	7212B-338001-0000	P3380017212B0000	货架下固定座	Lower Fixed Base,Rear Rack Basket	8	
4	GB/T6183.2-M10×1.25	BGB6183.2-M10×1.25	非金属嵌件六角法兰面锁紧螺母M10×1.25	Locked Nut M10×1.25	88	
5	BGB70.2-M10×1.25×25	GB/T70.2-M10×1.25×25	内六角平圆头螺钉M10×1.25×25	Hexagon Socket Screw M10×1.25×25	88	
6	86171-338001-0000	P338001861710000	货架上固定座	Upper Fixed Base,Rear Rack Basket	8	
7	515BF-338001-0000	P338001515BF0000	上安装支耳	Upper Mounting Lug,Rear Rack Basket	4	
8	515BG-338001-0000	P338001515BG0000	货架固定板Ⅰ	Mounting Plate I,Rear Rack Basket	2	
9	515BE-338001-0000	P338001515BE0000	货架立柱	Rear Rack Basket	4	
10	515BA-338001-0000	P338001515BA0000	货箱挂板	Hanging Plate	4	
11	515BC-338001-0000	P338001515BC0000	下安装支耳Ⅱ	Lower Mounting Lug II,Rear Rack Basket	2	
12	515BB-338001-0000	P338001515BB0000	下安装支耳Ⅰ	Lower Mounting Lug I,Rear Rack Basket	2	
13	BGB70.2-M8×80	GB/T70.2-M8×80	内六角平圆头螺钉M8×80(全螺纹)	Hexagon Socket Screw M8×80	8	
14	GB/T93-8	BGB93-8	弹垫8	Spring Washer 8	8	
15	GB/T97.1-8	BGB97.1-8	平垫φ8×φ24×2	Flat Washer 8	8	
16	90605-J00000-0300	PJ00000906050300	平垫φ10×φ25×3	Flat Washer φ10×φ25×3	88	

二十一、行李架分组件Roof Rack Kit

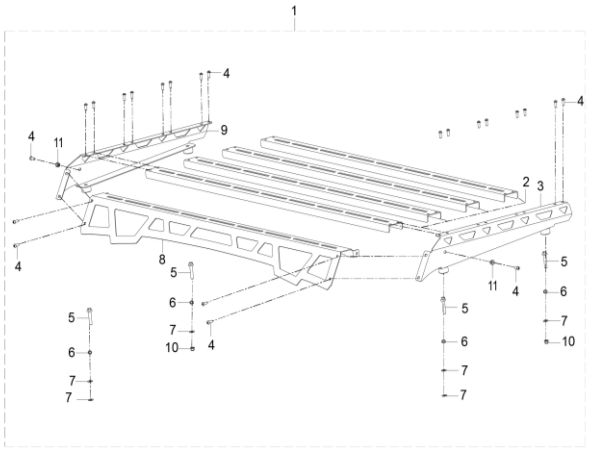

序号 No	零部件图号 PartNo.	存货编码	零部件名称及规格	Description	数量 Q'TY	备注 REMARK
1	84200-338001-0000	P338001842000000	行李架分组件	Roof Rack Kit	1	
2	515BK-338001-0000	P338001515BK0000	货架固定板Ⅳ	Mounting Plate IV,Rear Rack	4	
3	84222-338001-0000	P338001842220000	行李架安装板组合L	Mounting Plate (L),Roof Basket	1	
4	90228-J00000-0400	PJ00000902280400	圆头带垫内六角螺栓M6*16	Bolt M6*16	22	
5	GB/T16674-M8×40	BGB16674-M8×40	六角法兰面螺栓M8×40	Hexagon Flange Bolt M8×40	4	
6	GB/T 93-8	BGB93-8	弹垫8	Spring Washer 8	4	
7	GB/T97.1-8	BGB97.1-8	平垫φ8×φ24×2	Flat Washer 8	6	
8	84221-338001-0000	P338001842210000	行李架前安装板	Front Mounting Plate,Roof Basket	1	
9	84223-338001-0000	P338001842230000	行李架安装板组合R	Mounting Plate (R),Roof Basket	1	
10	GB/T6183.2-M8	BGB6183.2-M8	非金属嵌件六角法兰面锁紧螺母M8	Locked Nut M8	2	
11	GB/T6183.2-M6	BGB6183.2-M6	非金属嵌件六角法兰面锁紧螺母M6	Locked Nut M6	2	

二十二、内后视镜分组件Rear View Mirror Kit

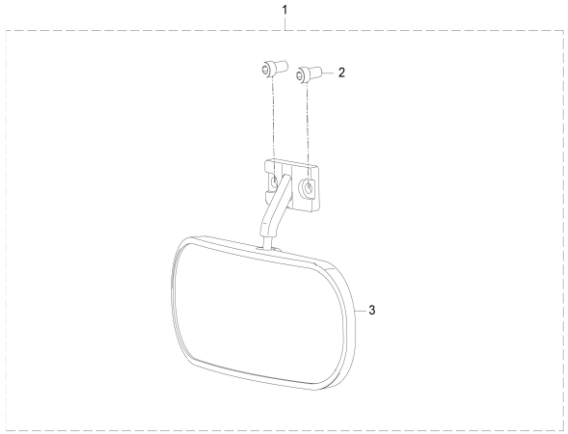

序号 No	零部件图号 PartNo.	存货编码	零部件名称及规格	Description	数量 Q'TY	备注 REMARK
1	~~89260-338001-0000~~	~~P338001892600000~~	~~内后视镜分组件~~	~~Rear View Mirror Kit~~	~~1~~	
	89260-338001-0100	P338001892600100	内后视镜分组件	Rear View Mirror Kit	1	
2	GB/T70.1-M8×16	BGB70.1-M8×16	内六角圆柱头螺钉M8×16	Hexagon Socket Screw M8×16	2	
3	~~89260-338001-0000~~	~~P338001892600000~~	~~内后视镜~~	~~Rear View Mirror Kit~~	~~1~~	
	89260-338001-0100	P338001892600100	内后视镜分组件		1	含标件及说明书

二十三、头枕组合分组件Headrest Assy Kit

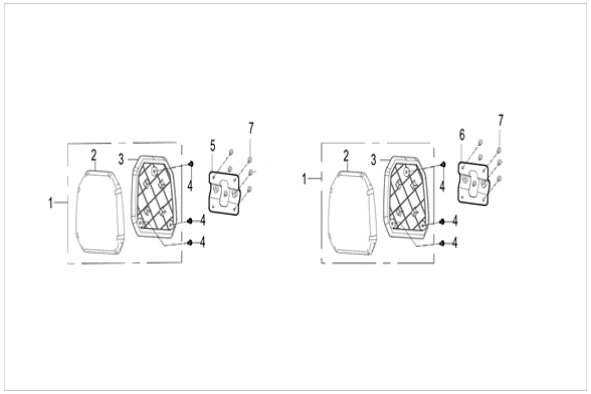

序号 No	零部件图号 PartNo.	存货编码	零部件名称及规格	Description	数量 Q'TY	备注 REMARK
1	71310-321001-0000	P321001713100000	头枕组合	Headrest Assy	1	
2	71313-321001-0000	P321001713130000	头枕泡沫组合	Headrest Foam Assy	2	
3	71311-321001-0000	P321001713110000	头枕底板	Headrest Bottom Plate	2	
4	90520-J00000-0500	PJ00000905200500	十字槽大盘头螺钉M6×16	Screw Cross Large Head M6×16	14	
5	51730-333006-AL00	P33300651730AL00	头枕安装板R	Headrest Mounting Plate R	1	
6	51730-333006-AC00	P33300651730AC00	头枕安装板L	Headrest Mounting Plate L	1	
7	GB/T70.4-M8×16	BGB70.4-M8×16	圆头带垫内六角螺栓M8×16	Bolt Hexagon Flange Head M8×16	4	