一、气缸头总成 CYLINDER HEAD ASSY

#NAMN?

序号 No.	ERP编码 ERP Number	零部件名称及规格 Description In Chinese	Description in English	易损件	数量 Q'ty
1	P032000122000000	气缸头总成（明细见附页1）	Cylinder Head Assembly		1

二、气缸头CYLINDER HEAD

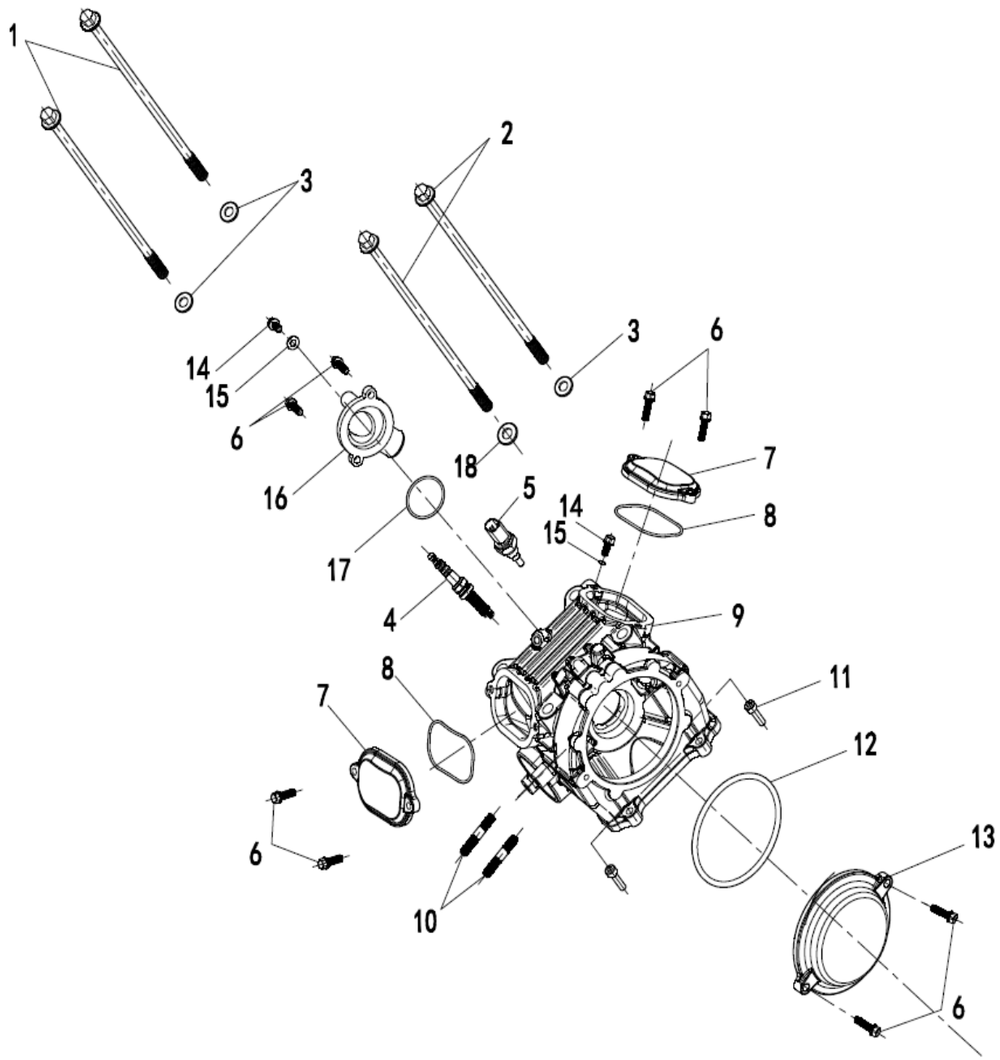

序号 No.	ERP编码 ERP Number	零部件名称及规格 Description In Chinese	Description in English		数量 Q'ty
1	P030000110180000	气缸螺栓M10×1.25×230	Cylinder bolt M10×1.25×230		2
2	P032000110180000	气缸螺栓M10×1.25×240	Cylinder bolt M10×1.25×240		2
3	PJ00000906003400	铁垫圈10×19×2	Iron Washer 10×19×2	Y	3
4	P010000333000000	火花塞(NGK DCPR7E)	Spark Plug NGK DCPR7E	Y	1
5	P010000391300020	水温传感器	Water Temperature Sensor	Y	1
6	BGB5787-M6×20	六角法兰面螺栓M6×20	Hexagon Flange Bolt M6×20		8
7	P030000123010000	气门盖	Cover,Valve		2
8	PJ00000912016600	O形密封圈64.4×3.1	O-Ring 64.4×3.1	Y	2
9	P0320001220A0000	气缸头组合	Cylinder Head Assy		1
10	BGB901-M8×45-B	双头螺柱M8×45（不锈钢）	Stud M8×45-B(SUS)		2
11	BGB70-M6×25	内六角圆柱头螺钉M6×25	Hexagon Socket Head Cap Screw M6×25		2
12	PJ00000912017400	O形密封圈90×3	O-Ring 90×3	Y	1
13	P030000123210000	气缸头左盖	Cover,Cylinder Head,Left		1
14	GBT5787-M6×12	六角法兰面螺栓M6×12	Hexagon Flange Bolt M6×12		2
15	PJ00000906010100	铝垫圈6×12×1.5	Aluminum washer 6×12×1.5	Y	2
16	P036100190090001	节温器盖	Thermostat cap		1
17	P004000194110000	节温器盖O形密封圈	Thermometer cap O-ring seal		1
18	PJ00000906020400	铜垫圈10×18×2	Copper Washer 10×18×2	Y	1
	PJ00000906020500	铜垫圈10×18×3	Copper Washer 10×18×3	Y	1

三、进气管 Air Inlet Pipe

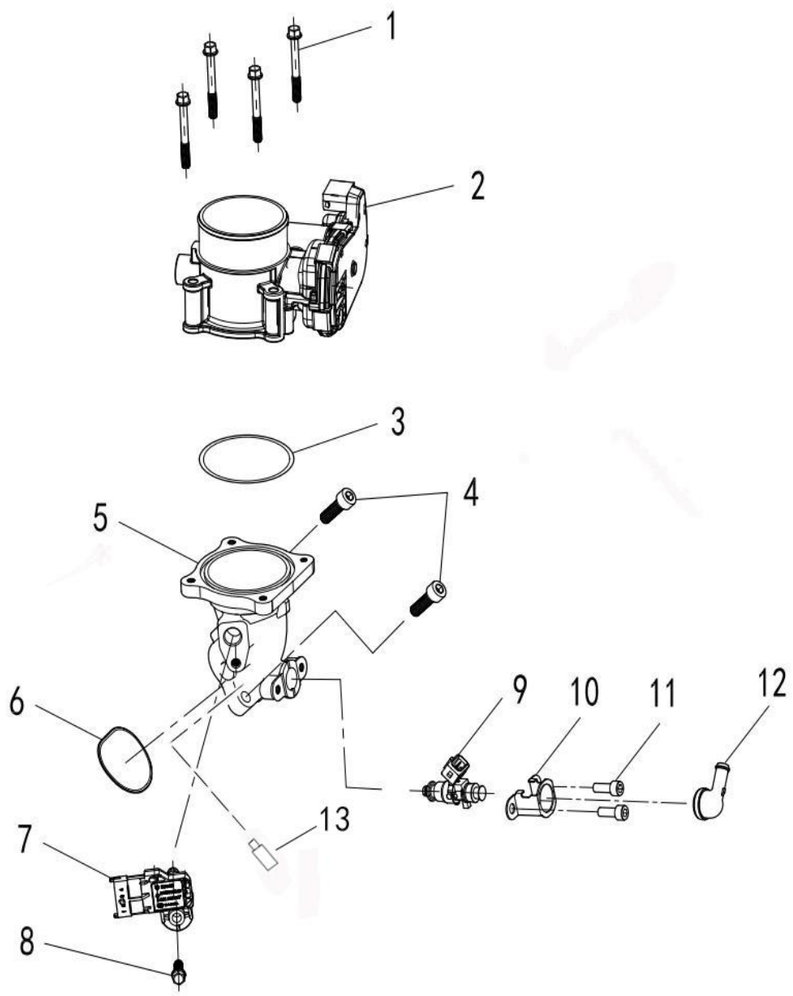

序号 No.	ERP编码 ERP Number	零部件名称及规格 Description In Chinese	Description in English		数量 Q'ty
1	BGB5787-M6×50	六角法兰面螺栓M6×50	Hexagon Flange Bolt M6×50		4
2	331660010	电子节气门总成	Electronic throttle assembly	Y	1
3	PJ00000912015900	O形密封圈56.75×3.53	O-Ring 56.75×3.53	Y	1
4	BGB70.1-M8×25	内六角圆柱头螺栓M8×25	Hexagon Socket Head Cap Screw M8×25		2
5	P034000124110100	进气管	Intake pipe		
6	PJ00000912015200	O形密封圈45×2.5	O-Ring 45×2.5	Y	1
7	P033000391500300	进气温度/压力传感器	Temperature/Pressure Sensor	Y	1
8	BGB5787-M6×12	六角法兰面螺栓M6×12	Hexagon Flange Bolt M6×12		1
9	P012000165300000	喷油器	Fuel Injector	Y	1
10	P007000164310000	喷油器压板	Fuel injector clamp		1
11	BGB70-M6×16	内六角圆柱头螺栓M6×16	Hexagon Socket Head Cap Screw M6×16		2
12	P007000164300004	喷油器固定座III	Fixed Seat III,Fuel Injector		1
13	E01731200	负压嘴φ8	Negative pressure nozzle		1

四、气门VALVE

#NAMN?

序号 No.	ERP编码 ERP Number	零部件名称及规格 Description In Chinese	Description in English		数量 Q'ty
1	P032000147110000	进气门	Intake Valve		2
2	P032000147210000	排气门	Exhaust Valve		2
3	P010000147020000	气门弹簧垫圈	Valve Spring		4
4	P032000147030100	气门弹簧	Spring,Valve		4
5	P013000147050000	挡油罩组件	Oil shield assembly	Y	4
6	P013000147070000	气门弹簧座	Retainer,Valve Spring		4
7	P013000147130000	气门锁夹	Valve Lock Keeper		8
8	P033000144030000	摇臂轴	Rockershaft		2
9	P0320001441A0000	排气摇臂组合	Exhaust rocker arm assembly	Y	1
10	P0320001442A0000	进气摇臂组合	Intake rocker arm assembly	Y	1
11	PJ00000906040600	波形垫圈12.5×16×0.4	Wave-shaped washer 12.5×16×0.4		2

五、气缸体CYLINDER

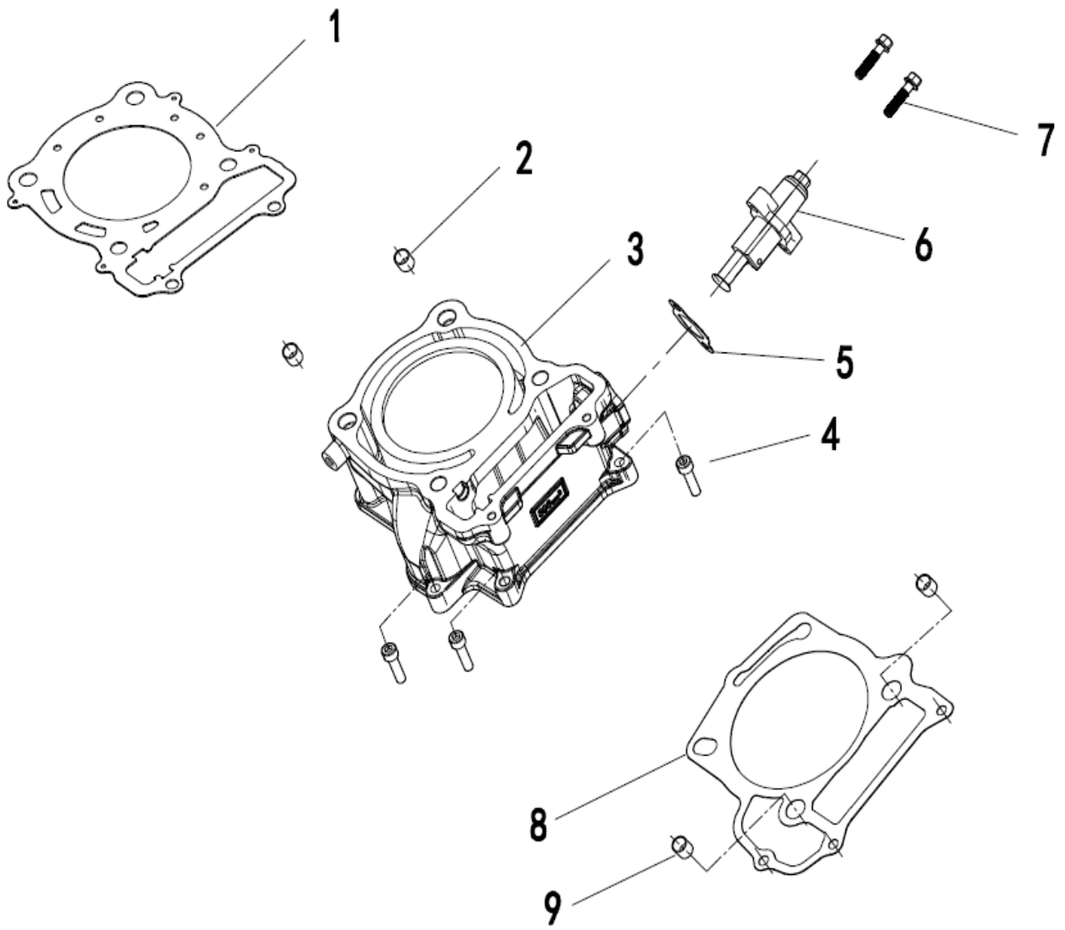

序号 No.	ERP编码 ERP Number	零部件名称及规格 Description In Chinese	Description in English		数量 Q'ty
1	P0320001207A0000	气缸头密封垫	Gasket,Cylinder Head	Y	1
2	PJ00000908020400	定位销12×16	Pin,Dowel 14×16		2
3	P0320001211A0000	气缸组合	Cylinder Body Assy	Y	1
4	BGB70-M6×30	内六角圆柱头螺钉M6×30	Hexagon Socket Head Cap Screw M6×30		3
5	P002000145080000	张紧器密封垫	Gasket,Tensioner	Y	1
6	P004000145300000	张紧器组合	Tensioner Assy.	Y	1
7	GB/T5787-M6×25	六角法兰面螺钉M6×25	Hexagon Flange Bolt M6×25		2
8	P030000120090000	气缸体密封垫	Gasket,Cylinder Base	Y	1
9	PJ00000908020600	定位销14×16	Pin,Dowel 14×16		2

六、凸轮轴CAMSHAFT CHAIN

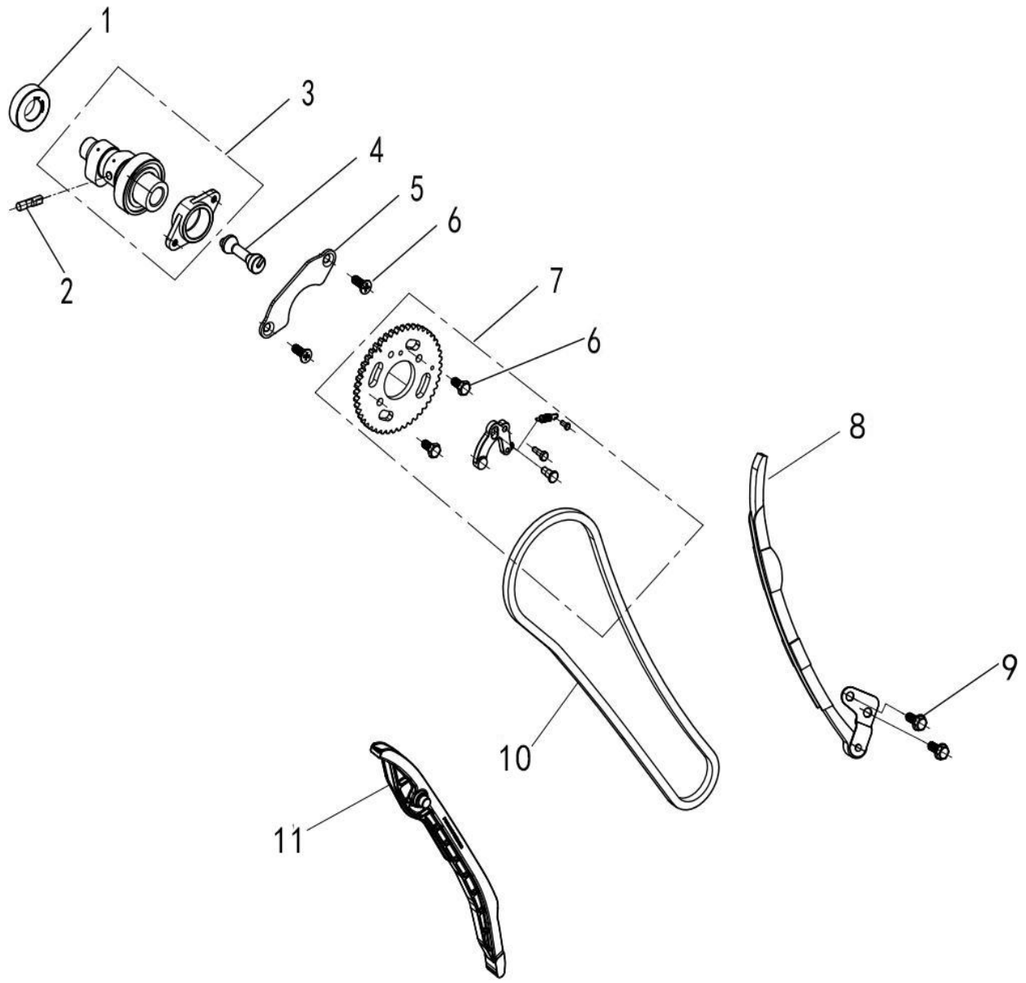

序号 No.	ERP编码 ERP Number	零部件名称及规格 Description In Chinese	Description in English		数量 Q'ty
1	BGB276-6003Z	轴承6003Z	Bearing 6003Z		1
2	P033000141140000	减压销	Compression pin		1
3	P032000141000000	凸轮轴部件	Camshaft component	Y	1
4	P033000141150000	转销	Rotate Pin		1
5	P033000143060000	凸轮轴限位板	Camshaft stop plate		1
6	BGB5783-M6×12-F	六角头螺栓M6×12	Hexagon head bolt M6×12		2
7	P0360001431A0000	正时从动链轮组合	Camshaft Sprocket Assy		1
8	P0320001452B0000	链条导向板	Timing Chain Guide		1
9	BGB9074.14-M6×16	组合螺栓M6×16	Hexagon head bolt M6×16		2
10	P032000143020000	正时链条M7-6.35-116	Timing Chain M7-6.35-116	Y	1
11	P0300001451B0000	链条张紧板	Timing Chain Tensioner Guide		1

七、活塞连杆CRANKSHAFT PISTON

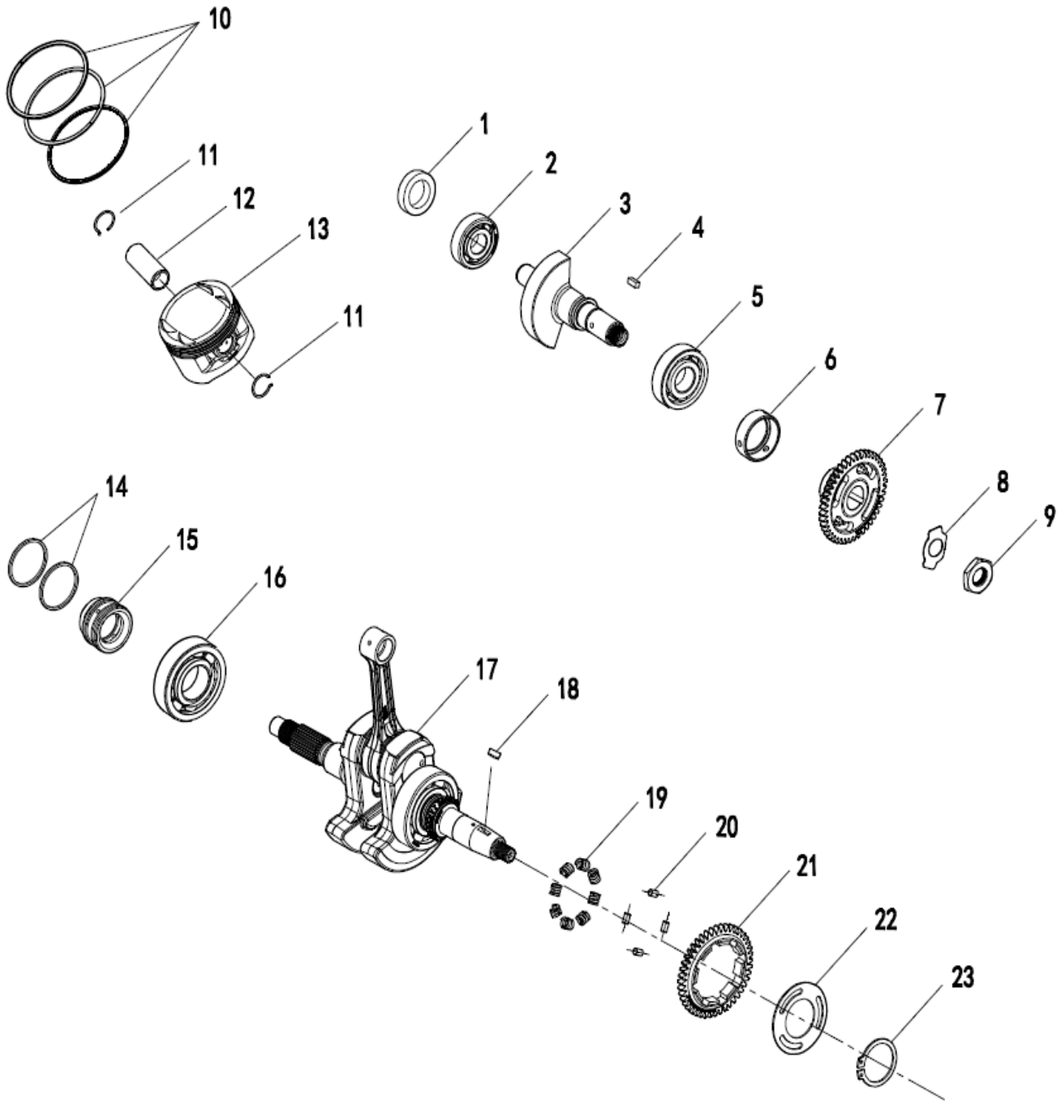

序号 No.	ERP编码 ERP Number	零部件名称及规格 Description In Chinese	Description in English		数量 Q'ty
1	PJ00000911012100	油封20×30×7	Oil seal: 20 × 30 × 7	Y	1
2	BGB276-6304	轴承6304	Bearing 6304		1
3	P0320001331A0000	平衡轴组合	Balance Shaft		1
4	BGB1096-B5×12.4	平建B5×12.4	Píngjiàn B5×12.4		1
5	BGB276-6305	轴承6305	Bearing 6305		1
6	P016000133270000	平衡从动齿轮衬套	Balanced driven gear bushing		1
7	P0300001332A0000	平衡从动齿组件	Balanced driven gear assembly		1
8	PJ00000906030400	止退垫圈B	Retaining ring B		1
9	PJ00000904021000	螺母M18×1	Nut M18×1		1
10	P0040001311A0000	活塞环组件	Piston Ring Set	Y	1
11	P032000131070000	活塞销挡圈	Circlip,Piston Pin		2
12	P032000131020000	活塞销	Piston Pin		1
13	P032000131010000	活塞	Piston	Y	1
14	P003000110240000	密封环	Sealing ring		2
15	P004000110230000	密封环套	Sealing ring sleeve		1
16	BGB276-6306	轴承6306	Bearing 6306		1
17	P032000132000000	曲轴连杆部件	Crankshaft and connecting rod assembly		1
18	P004000130010000	半圆键	Woofruff Key		1
19	P004000133250000	平衡主动齿轮缓冲簧	Buffer Spring,Balance Gear		8
20	P004000133260000	平衡主动齿圈限位销	Spacer Pin,Balance Gear		4
21	P004000133220000	平衡主动齿轮	Driving Gear,Balance Shaft		1
22	P004000133230000	平衡主动齿左定位板	Balance active gear left positioning plate		1
23	BGB894.1-35	轴用弹性挡圈φ35	Axial elastic retaining ring φ35		1

八、曲轴箱CRANKCASE(500UTV-5)

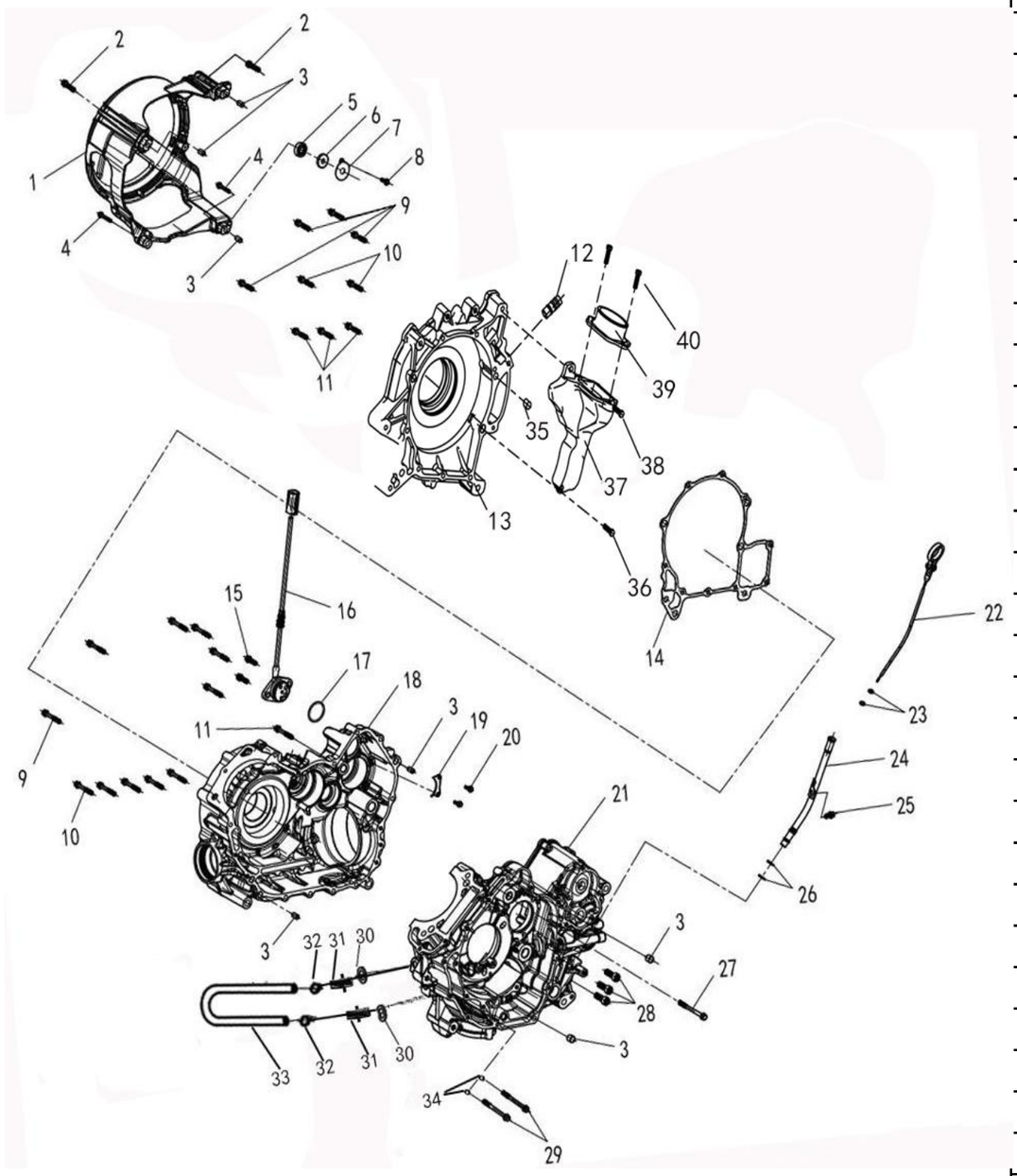

序号 No.	ERP编码 ERP Number	零部件名称及规格 Description In Chinese	Description in English		数量 Q'ty
1	P033000113310000	离合器护罩支架	Shield Bracket,Clutch		1
2	GB/T5787-M8×40	六角法兰面螺栓M8×40	Hexagon Flange Bolt M8×40		2
3	PJ00000908020300	定位销10×16	Locating pin 10×16		8
4	BGB5787-M8×70	六角法兰面螺栓M8×70	Hexagon Flange Bolt M8×70		2
5	BGB276-62012Z	轴承6201 2Z	Bearing 6201 2Z		1
6	91101-J00000-1200	油封12×32×6	Oil Seal 12×32×6	Y	1
7	11032-004000-0000	支架油封压板	Support shaft oil seal pressure plate		1
8	BGB5787-M6×16	六角法兰面螺栓M6×16	Hexagon Flange Bolt M6×16		1
9	BGB5787-M6×45	六角法兰面螺栓M6×45	Hexagon Flange Bolt M6×45		4
10	BGB5787-M6×50	六角法兰面螺栓M6×50	Hexagon Flange Bolt M6×50		3
11	BGB5787-M6×35	六角法兰面螺栓M6×35	Hexagon Flange Bolt M6×35		4
12	P004000112040000	通气管接头	Ventilation pipe joint		1
13	P035000113111000	右曲轴箱盖	Right crankcase cover		1
14	P033000110170000	右曲轴箱盖密封垫	Right crankcase cover gasket	Y	1
15	BGB5787-M6×40	六角法兰面螺栓M6×40	Hexagon Flange Bolt M6×40		10
16	P033000365500003	档显传感器	Analog display sensor	Y	1
17	PJ00000912013800	O形密封圈29.6×2.4	O-Ring 29.6×2.4		1
18	P0300001110A1000	右曲轴箱组合	Right Crankcase Assy		1
19	P004000110130000	主轴承压板	Main bearing retaining plate		1
20	GB/T 5787-M6×16	六角法兰面螺栓M6×16	Hexagon Flange Bolt M6×16		2
21	P0300001120A0000	左曲轴箱组合	Left Crankcase Assy		1
22	P033000156500001	机油标尺组合	Oil dipstick assembly		1
23	PJ00000912010200	O形密封圈6×2	O-ring 6×2	Y	2
24	P036000006300000	机油尺导向管	Oil dipstick guide tube		1
25	BGB5787-M6×12	六角法兰面螺栓M6×12	Hexagon Flange Bolt M6×12		1
26	PJ00000912010700	O形密封圈9×2	O-ring 9×2	Y	2
27	BGB5787-M6×85	六角法兰面螺栓M6×85	Hexagon Flange Bolt M6×85		1
28	BGB70-M8×40	内六角圆柱头螺钉M8×40	Hexagon Socket Head Cap Screw M8×40		3
29	BGB5787-M6×75	六角法兰面螺栓M6×75	Hexagon Flange Bolt M6×75		2
30	PJ00000906010700	铝垫圈14×20×1.5	Aluminum washer 14×20×1.5	Y	2
31	P003000111050000	油管接头	Oil pipe joint		2
32	PJ00000907300000	螺钉锁紧抱箍A Ø12 ~ Ø20	Screw-locking clamp A: Ø12 - Ø20		2
33	P010D00153072050	橡胶油管2050	Rubber oil pipe 2050		1

34	PJ00000906010100	铝垫圈6×12×1.5	Aluminum washer 6×12×1.5	Y	2
35	P034000188160000	排气塞	Exhaust valve		1
36	BGB5787-M6×25	六角法兰面螺栓M6×25	Hexagon Flange Bolt M6×16		1
37	P033000115210100	离合器进气管	Clutch Intake Pipe		1
38	GB/T5787-M8×25	六角法兰面螺栓M8×25	Hexagon Flange Bolt M8×40		1
39	P033000215010000	离合器进气管接头	Clutch intake pipe joint		1
40	BGB70-M5×12	内六角圆柱头螺钉M5×12	Hexagon head round column head screw M5×12		2

九、曲轴箱盖CRANKCASE COVER 1

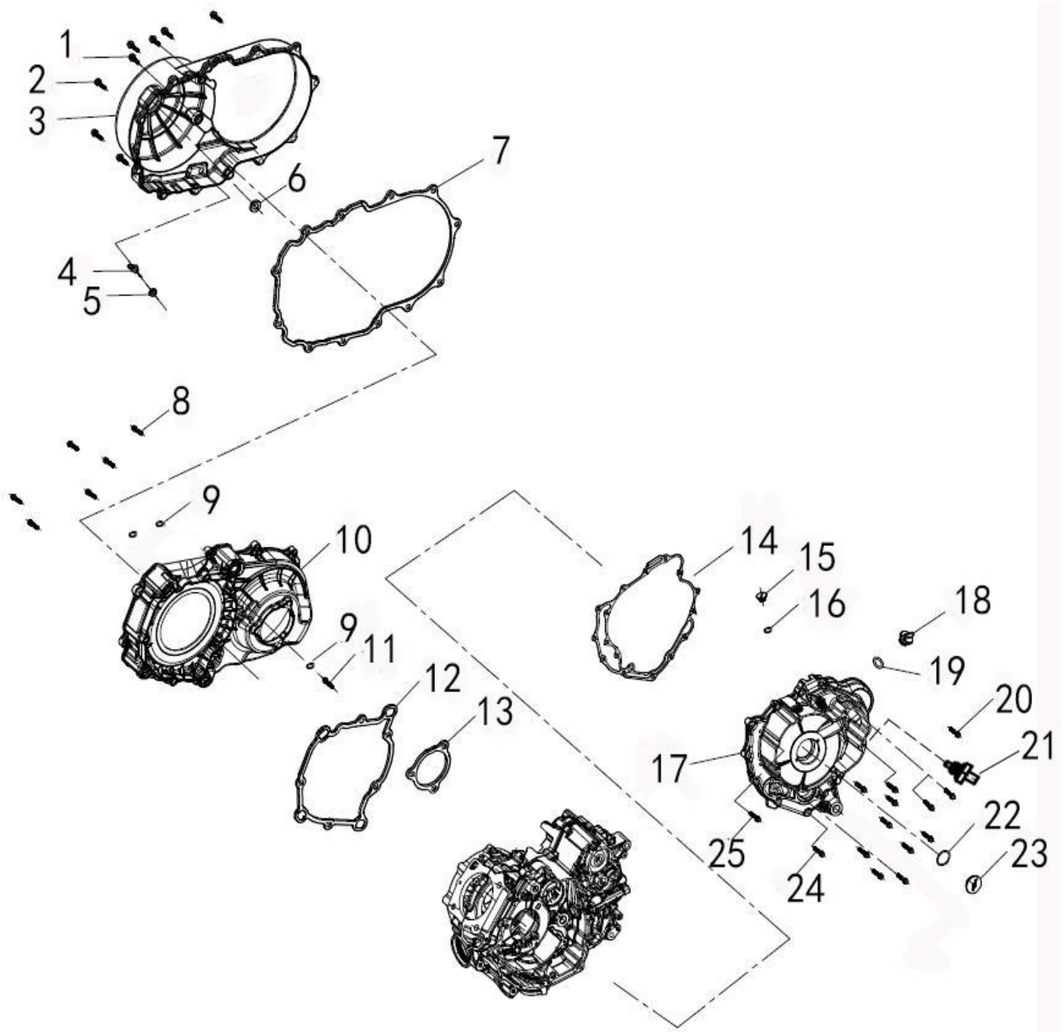

序号 No.	ERP编码 ERP Number	零部件名称及规格 Description In Chinese	Description in English		数量 Q'ty
1	BGB5789-M6×28	六角法兰面螺栓M6×28	Hexagon Flange Bolt M6×28		12
2	BGB5789-M6×20	六角法兰面螺栓M6×20	Hexagon Flange Bolt M6×20		2
3	P0330001152A0100	离合器盖组合	Cover,Clutch,Outer		1
4	P003000115040000	离合器盖堵头	Drain Plug,Clutch Cover		1
5	P003000115030000	胶套	Damper		1
6	PJ00000931100200	橡胶平垫φ12×φ25×5.5	Rubber flat gasket φ12×φ25×5.5		1
7	P033000115230001	离合器盖密封圈	Clutch cover sealing ring		1
8	BGB5789-M6×32	六角法兰面螺栓M6×32	Hexagonal flange bolt M6×32		6
9	BGB93-6	Φ6 弹垫	Φ6 spring washer		8
10	P0330001151A0100	离合器盖座组合	Cover,Clutch,Inner		1
11	BGB5789-M6×50	六角法兰面螺栓M6×50	Hexagonal flange bolt M6×50		2
12	P033000115110000	离合器盖座密封圈 I	Seal,Clutch Inner Cover I		1
13	P033000115120000	离合器盖座密封圈 II	Seal,Clutch Inner Cover II		1
14	P033000114020000	左前盖密封垫	Left front cover gasket	Y	1
15	P003000110020000	小视孔盖	Small Peep Hole Cover		1
16	PJ00000912011400	O形密封圈13.4×2.35	O-Ring 13.4×2.35	Y	1
17	P030000114010001	左前盖	Left front cover		1
18	P001000156510000	机油塞(M20×2.5)	Oil filler cap (M20×2.5)		1
19	PJ00000912012400	O形密封圈18×3.5	O-Ring 18×3.5		1
20	BGB5787-M6×30	六角法兰面螺栓M6×30	Hexagon Flange Bolt M6×30		8
21	P315001365600001	压力传感器		Y	1
22	PJ00000912013700	O形密封圈27.4×2.4	O-Ring 27.4×2.4		1
23	P010000110030000	大视孔盖	Big Peep Hole Cover		1
24	BGB5787-M6×40	六角法兰面螺栓M6×40	Hexagonal flange bolt M6×40		4
25	BGB5787-M6×35	六角法兰面螺栓M6×35	Hexagon flange bolts M6×35		2
26					
27					
28					

十、传动系TRANSMISSION

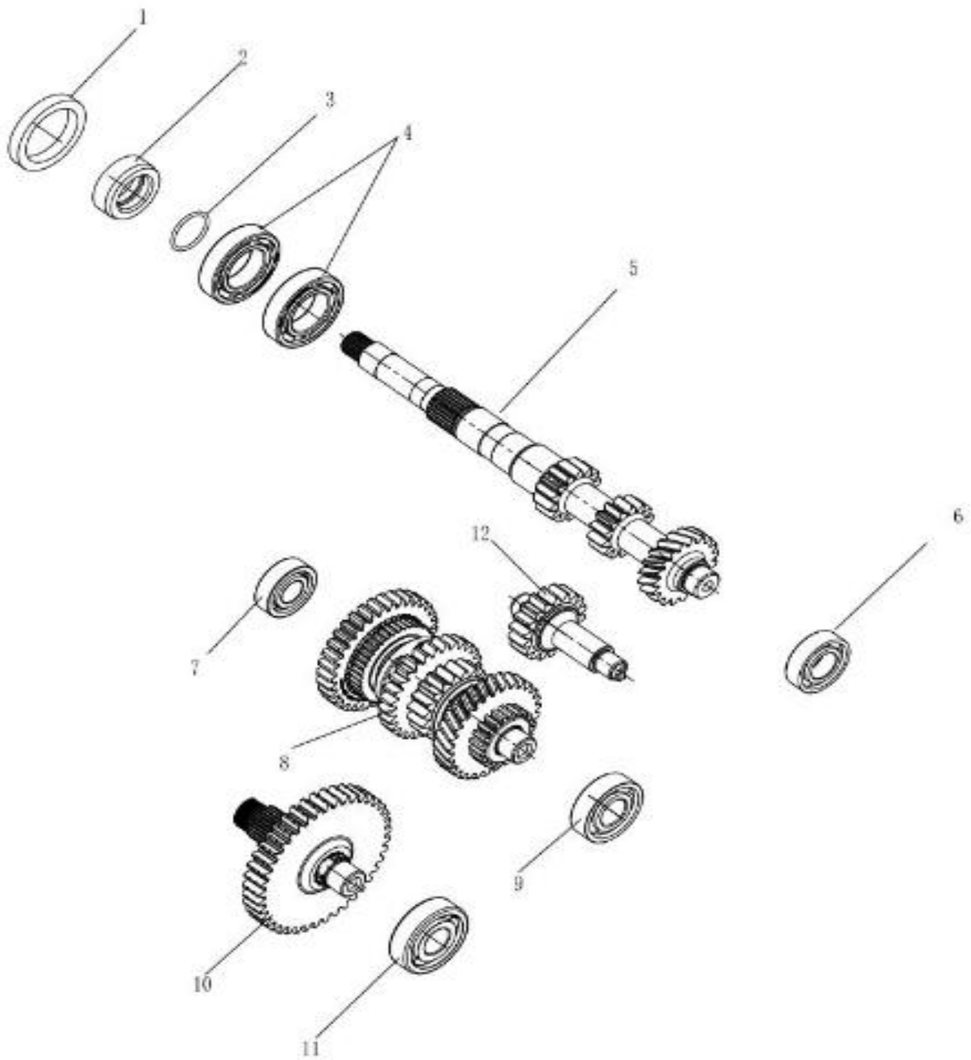

序号 No.	ERP编码 ERP Number	零部件名称及规格 Description In Chinese	Description in English		数量 Q'ty
1	PJ00000911011400	油封φ42×φ55×8	Oil seal: φ42 × φ55 × 8	Y	1
2	P030000211060000	次级CVT衬套(26×42×14.7)	Secondary CVT bushing (26×42×14.7)		1
3	PJ00000912013500	O形密封圈26.1×2.4	O-ring 26.1×2.4	Y	1
4	BGB276-6006	轴承6006	Ball bearing 6006		2
5	P030000222010100	传动主轴	Drive Main Shaft		1
6	BGB276-6004	轴承6004	Ball bearing 6004		1
7	BGB276-6203	轴承6203	Bearing 6203		1
8	P030000222600100	副轴组合	Counter shaft		1
9	BGB276-6204Z	轴承6204Z	Ball bearing 6204Z		1
10	P030000222800000	X传动轴组合	X transmission shaft assembly		1
11	BGB276-6304	轴承6304	Bearing 6304		
12	P030000222700000	倒档过桥轴组合			1

十一、中间传动系MIDDLED RIVE GEAR

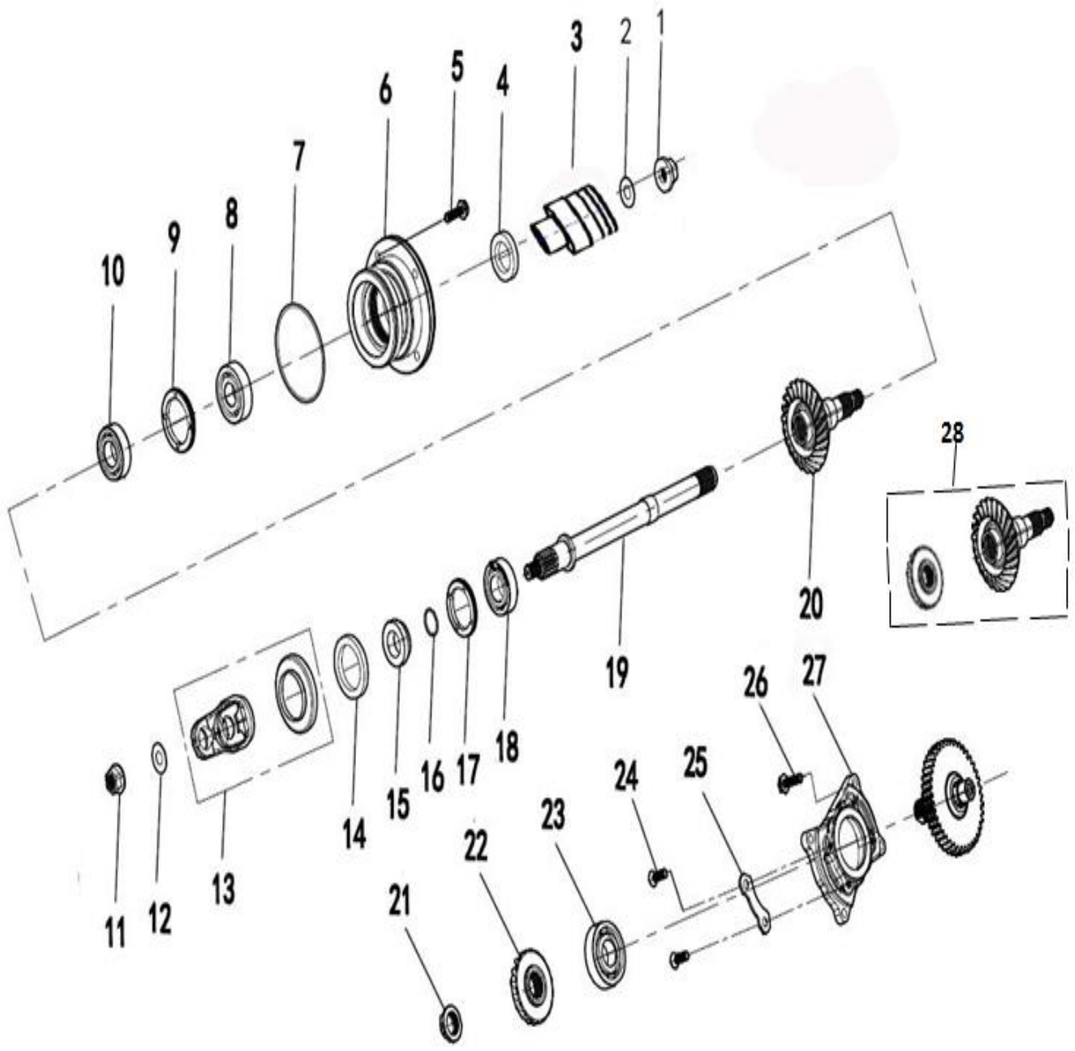

序号 No.	ERP编码 ERP Number	零部件名称及规格 Description In Chinese	Description in English		数量 Q'ty
1	BGB6187.2-M16	自锁螺母M16×1.5	Nut Lock M16×1.5		1
2	PJ00000906003200	垫圈16.5×28×4	Gasket 16.5 × 28 × 4		1
3	P0040002243A0000	后驱联轴器	Rear-axle coupling		1
4	PJ00000911011600	油封30×46×8	Oil Seal 30×46×8		1
5	BGB9074.14-M8×30	组合螺栓M8×30	Combined bolts M8×30		4
6	P004000111110000	Y轴承座	Y Shaft Bearing Block		1
7	PJ00000912017300	O形密封圈88×2.8	O-Ring 88×2.8	Y	1
8	BGB276-63/22	轴承63/22	Bearing 63/22		1
9	P004000111120000	锁紧环M60×1.5	Nut M60×1.5		1
10	BGB276-6207	轴承6207	Bearing 6207		1
11	BGB6187.2-M14	自锁螺母M14×1.5	Nut Lock M14×1.5		1
12	PJ00000906001400	垫圈14.5×32×5	Gasket 14.5 × 32 × 5		1
13	PJ00000254002201	节叉X	Yoke X		1
14	PJ00000911012300	油封44×60×7	Oil Seal 44×60×7	Y	1
15	P033000224330000	轴套25×44×15	Shaft sleeve: 25 × 44 × 15		1
16	PJ00000912013300	O形密封圈25×2.4	O-ring with dimensions 25×2.4	Y	1
17	P003000111130000	锁紧环M55	Locking Ring M55		1
18	BGB276-6205	轴承6205	Bearing 6205		1
19	P030000224040000	Y传动轴	Y Driveshaft		1
20	P004000224020000	从动锥齿轮	Driven Bevel Gear		1
21	PJ00000904021400	螺母M22×1	Hexagon Flange Nut M22×1		1
22	P004000224010100	主动锥齿轮	Driving bevel gear		1
23	BGB276-6305	轴承6305	Bearing 6305		1
24	BGB819.2-M8×25	十字槽沉头螺钉M8×25	Cross-slot countersunk Screw M8×25		4
25	P003000931160000	X轴承座压板	X bearing housing retaining plate		2
26	BGB5787-M8×30	六角法兰面螺栓M8×30	Hexagon Flange Bolts M8×30		4
27	P030000112110000	X轴承座	X bearing housing		1
28	P004000224000000	锥齿轮组合			1

十二、离合器CLUTCH

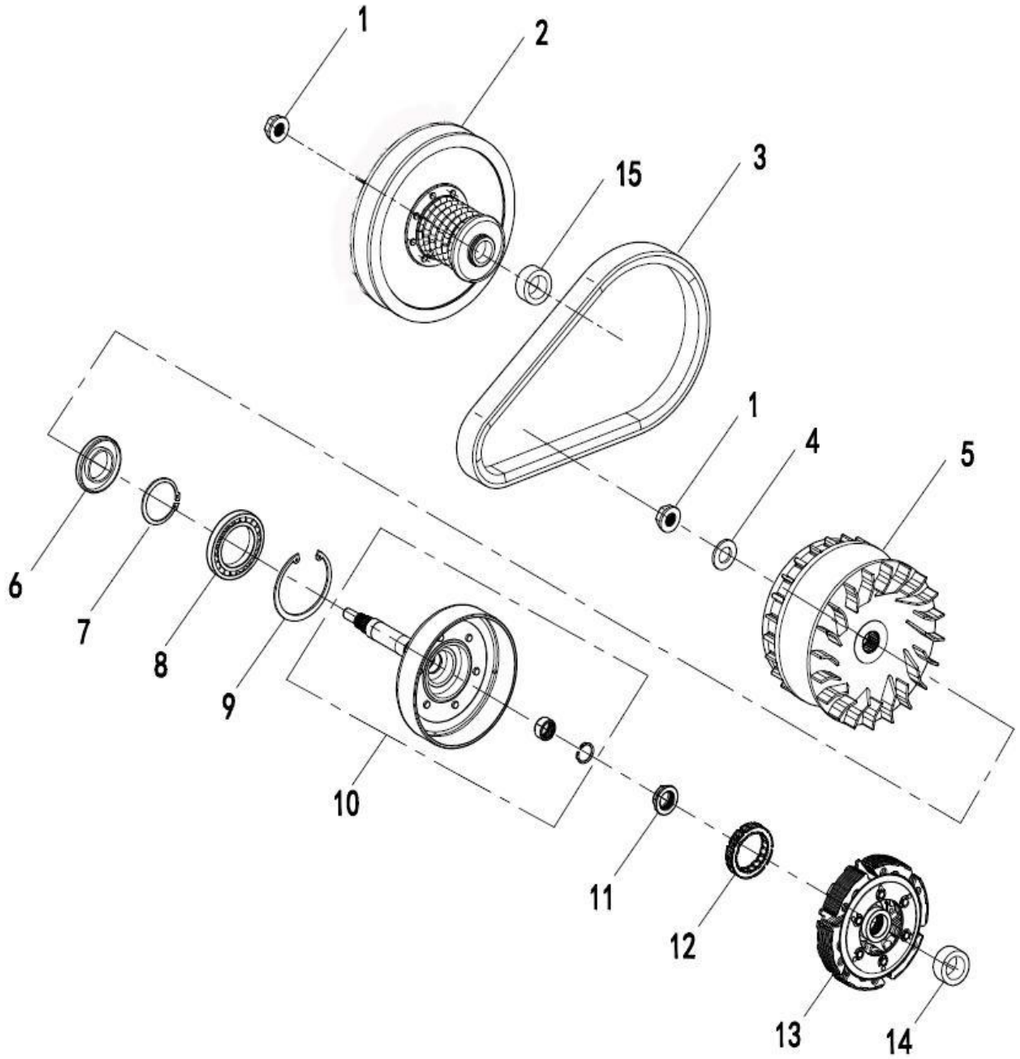

序号 No.	ERP编码 ERP Number	零部件名称及规格 Description In Chinese	Description in English		数量 Q'ty
1	PJ00000904020700	螺母M16×1	Nut M16×1		2
2	P033000212000000	次级离合器部件	Secondary clutch component	Y	1
3	P004000213000000	CVT皮带部件	CVT belt	Y	1
	E036000213000000	CVT皮带部件	CVT Belt	Y	1
4	PJ00000906001700	垫圈19.2×35×3.2	Gasket: 19.2 × 35 × 3.2		1
5	P032000211000000	初级离合器部件	Primary clutch components	Y	1
6	PJ00000911012200	油封35×65×9	Oil seal: 35 × 65 × 9	Y	1
7	BGB894.1-52	轴用弹性挡圈φ52	Axial elastic retaining ring φ52		1
8	BGB276-16010	轴承16010	Bearing 16010		1
9	BGB893-80	孔用弹性挡圈φ80	The elastic retaining ring φ80		1
10	P0330002114A0000	蹄块从动盘组合	Friction Wheel assembly,Clutch	Y	1
11	PJ00000904021400	螺母M22×1	Nut M22×1		1
12	P0040002113A0000	超越离合器组合	Clutch Drive 1 way hlrd Assy	Y	1
13	P0040002111A0150	蹄块组合	Friction shoes assembly,Clutch	Y	1
14	P035000211050000	初级CVT衬套	Primary CVT Bushing		2
15	P030000211060000	次级CVT衬套	Secondary CVT bushing		1

十三、换档凸轮,拨叉SHIFTCAM FORK

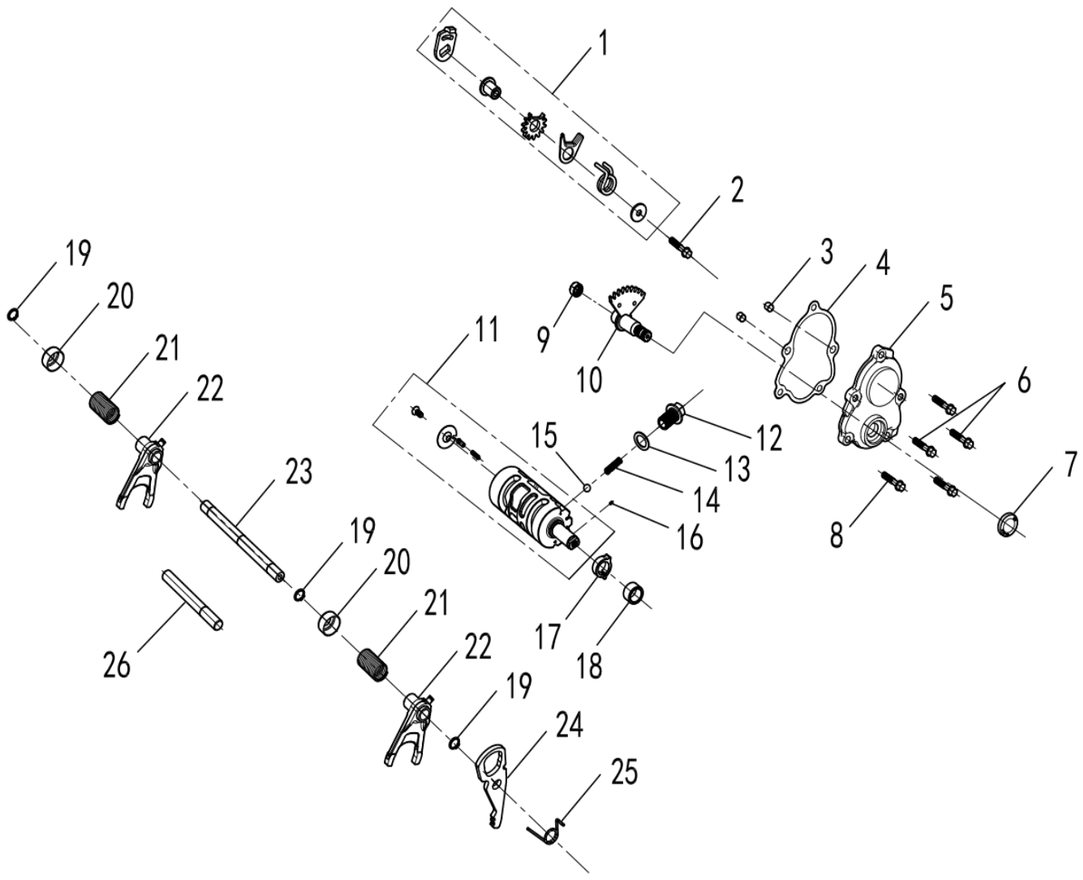

序号 No.	ERP编码 ERP Number	零部件名称及规格 Description In Chinese	Description in English		数量 Q'ty
1	~~P0320002321A0000~~	~~变速拨板组合~~	~~Shoe chain tensioner assembly~~		~~1~~
	P0340002321A0001	变速拨板组合	Shift Mechanism Assy		1
2	BGB 5787-M6×35	六角法兰面螺栓M6×35	Hexagon flange bolts M6×35		1
3	PJ00000908020100	定位销φ8×φ6.5×12	Locating pin: φ8×φ6.5×12		2
4	P033000114220000	换档臂侧盖密封垫	Gasket,Shiftshaft Cover	Y	1
5	P030000114210000	换档臂侧盖	Shiftshaft Cover		1
6	BGB5787-M6×25	六角法兰面螺栓M6×25	Hexagon Flange Bolt M6×25		2
7	PJ00000911011000	油封15×25×5	Oil Seal 15×25×5		1
8	BGB5787-M6×20	六角法兰面螺栓M6×20	Hexagon Flange Bolt M6×20		3
9	P012168937000000	滚针轴承HK12168	Roller bearing HK12168		1
10	P0330002333A0000	换档主动扇齿组件	Automatic gearshift active tooth assembly		1
11	P033000232010002	变速鼓部件	Variable speed drum component		1
12	P003000233150000	空芯螺栓M14×1.5×21	Coreless bolt M14×1.5×21		1
13	PJ00000906020700	铜垫圈14×21×1	Bronze washer 14×21×1		1
14	P002000233020000	变速轴复位弹簧	Variable speed shaft reset spring		1
15	BGB308-9.5	钢球SΦ9.5	Steel ball SΦ9.5		1
16	PJ00000908011100	圆柱销中2.5x13.8			1
17	P033000232030000	驻车凸轮	Parking cam		1
18	P033000232090000	衬套Ø15×Ø20×11.6	O-ring: Ø15 × Ø20 × 11.6		1
19	BGB894.1-12	轴用弹性挡圈φ12	Axial elastic retaining ring φ12		3
20	P004000231060000	拨叉轴簧座	Spring Seat,Shift Rail		2
21	P004000231070000	R档弹簧	Spring, R Gear		2
22	P0330002311A0000	拨叉组合	Pinion fork assembly		2
23	P033000231310000	拨叉轴	Shift Rail		1
24	P033000233510000	驻车臂	Parking arm		1
25	P033000233530000	驻车臂扭簧	Parking arm spring		1
26	P033000233520000	驻车臂轴	Parking arm shaft		1

十四、机油泵OIL PUMP

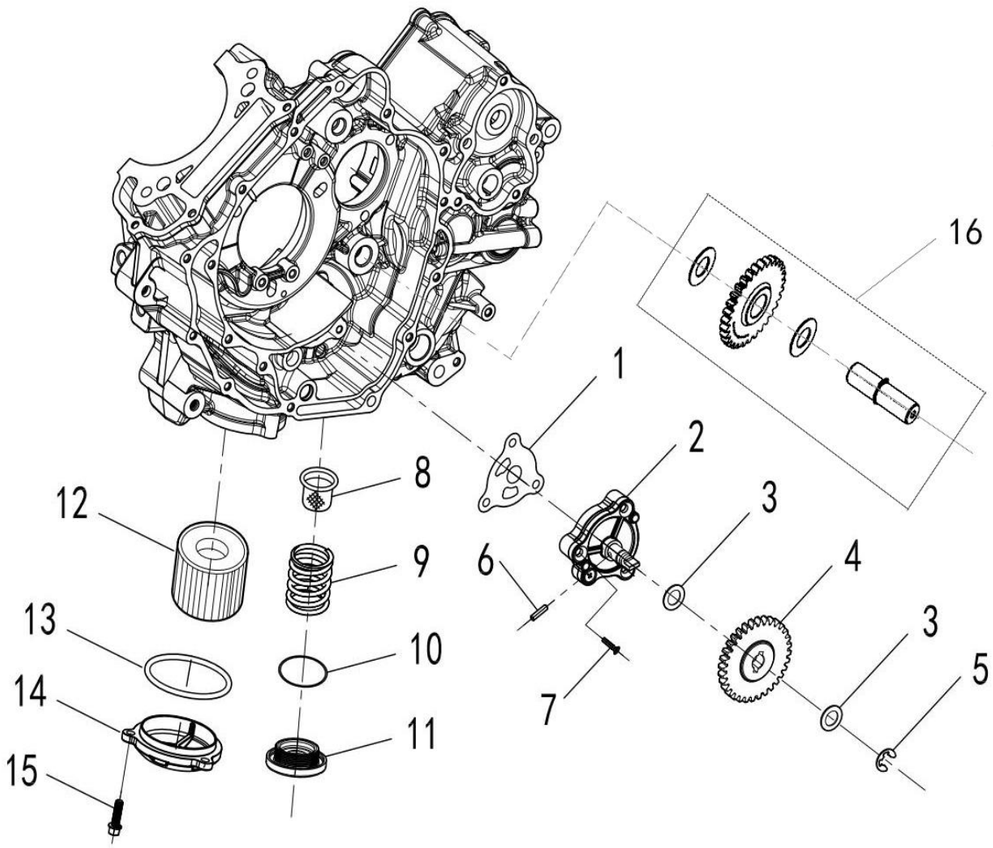

序号 No.	ERP编码 ERP Number	零部件名称及规格 Description In Chinese	Description in English		数量 Q'ty
1	P010000151010000	机油泵密封垫	Oil pump gasket		1
2	P036100151100000	油泵组合	Oil Pump Assy		1
3	P010000151540000	垫圈φ11.3×18	Washer φ11.3×18		2
4	P030000151160000	油泵从动齿轮	Driven Gear,Oil Pump		1
5	BGB896-9	开口挡圈9	Circlip 9		1
6	PJ00000908010700	油泵定位销φ4×16	Dowel Pin φ4×16		2
7	BGB819.1-M6×30	十字槽沉头螺钉M6×30	Cross recessed countersunk head screw M6×30		3
8	P002000152030000	机油滤网	Oil Filter Strainer		1
9	P002000152040000	滤网弹簧	Filter Spring		1
10	PJ00000912014700	O形密封圈36×3.5	O-Ring 36×3.5		1
11	P002000111070000	放油螺盖	Blind Nut,Oil Drainage		1
12	P0100001521A0000	机油滤清器组合	Oil Filter	Y	1
13	PJ00000912016400	O形密封圈61.5×2.4	O-Ring 61.5×2.4		1
14	P010000152050000	机油滤清器盖	Oil Filter Cover		1
15	BGB5787-M6×20	六角法兰面螺栓M6×20	Hexagon Flange Bolts M6×20		3
16	P030000151200000	油泵中间齿组合	Middle Gear,Oil Pump		1

十五、电起动系 STARTER

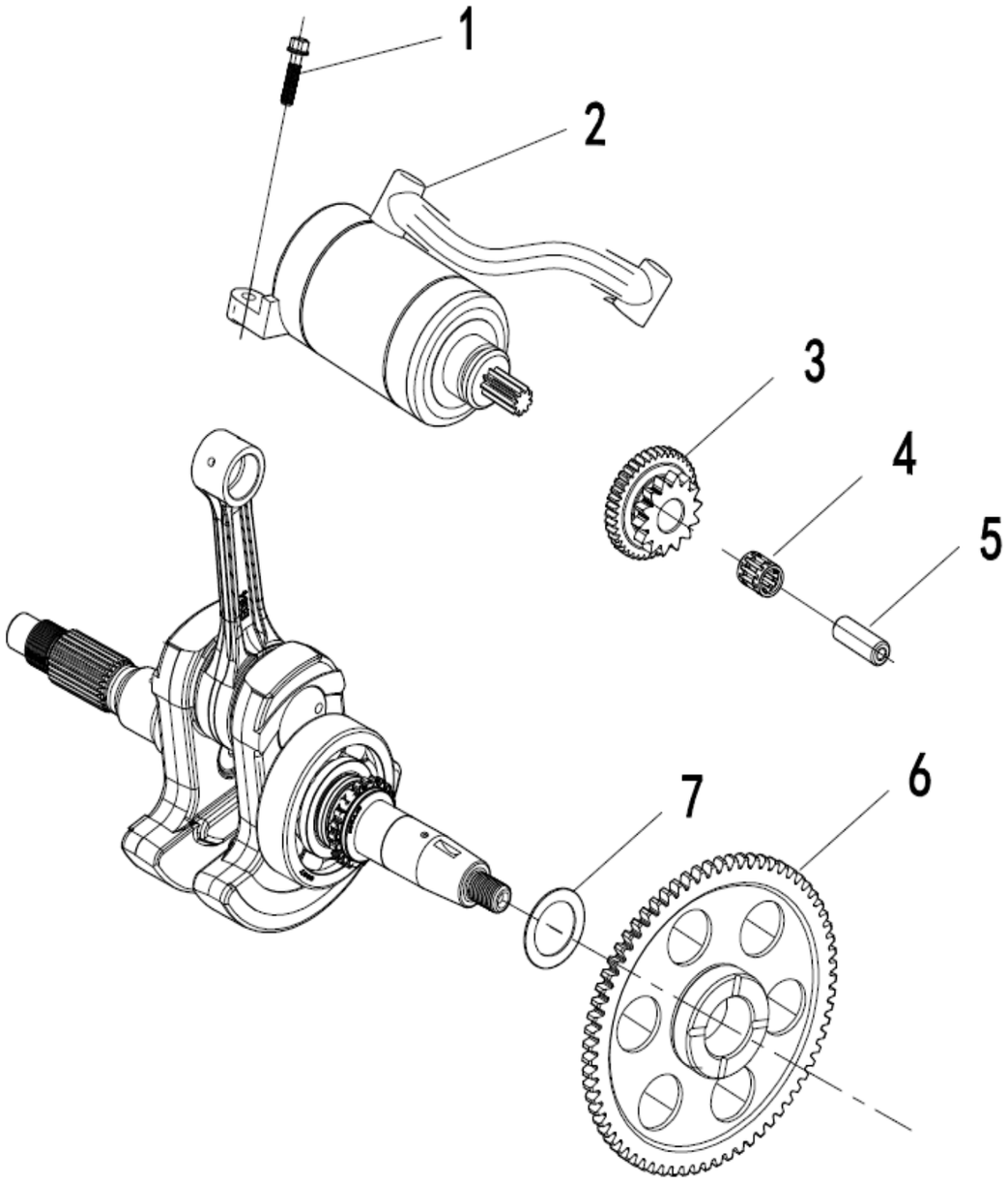

序号 No.	ERP编码 ERP Number	零部件名称及规格 Description In Chinese	Description in English		数量 Q'ty
1	BGB5787-M6×30	六角法兰面螺栓M6×30	Hexagon Flange Bolt M6×30		2
2	P030000312000002	起动电机部件	Starter Motor Assy	Y	1
3	P033000245030000	双联齿轮	Duplicate Gear		1
4	P121618937000000	滚针轴承KBK121618	Needle Bearing Kbk121618		1
5	P004000245040000	双联齿轮轴	Duplicate Gear Shaft		1
6	P0350002440A0000	盘形齿轮组合	Starter Disk Gear Assy		1
7	PJ00000906001101	垫圈	Washer		1

十六、磁电机 GENERATOR

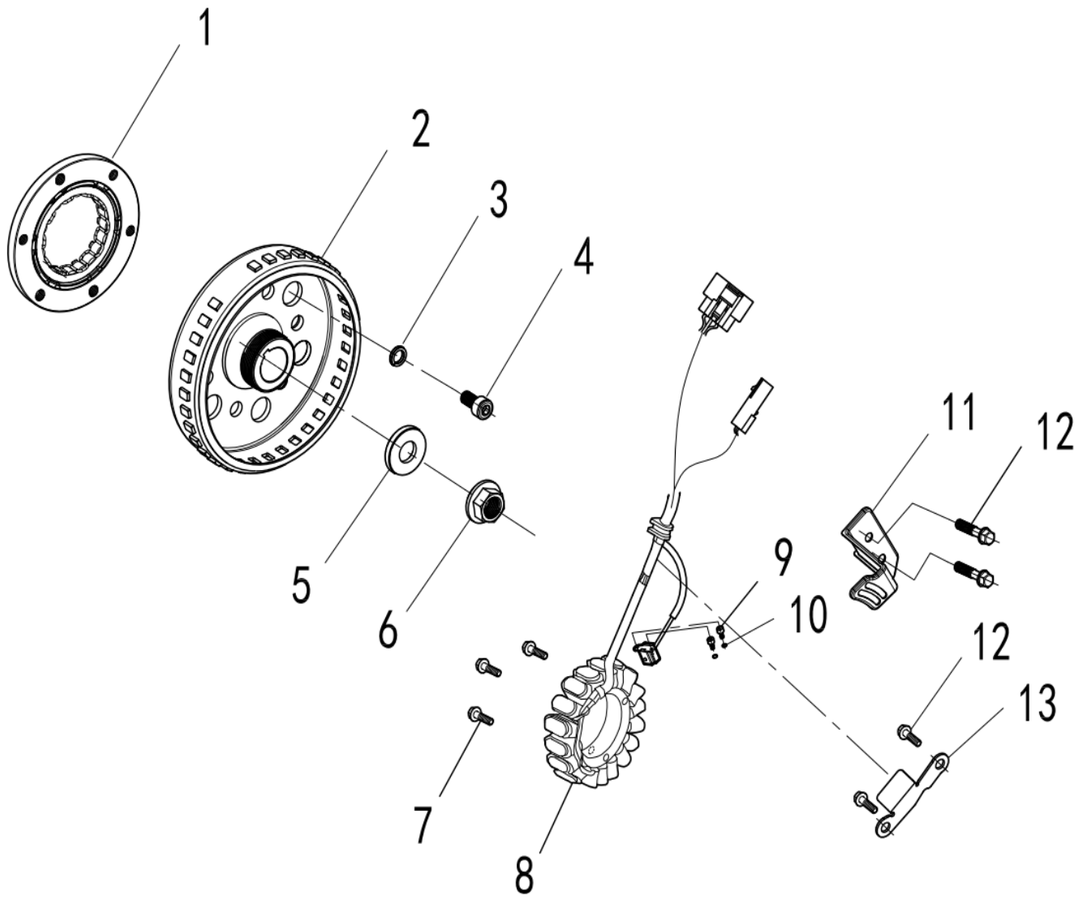

序号 No.	ERP编码 ERP Number	零部件名称及规格 Description In Chinese	Description in English		数量 Q'ty
1	P004000243100000	起动离合器组件	One Way Bearing Starter		1
2	P033000311100000	转子组合	Generator Rotor Assy		1
3	BGB93-8	弹垫φ8	Spring Washer 8		6
4	BGB70-M8×16	内六角圆柱头螺钉M8×16	Hexagon Socket Head Cap Screws M8×16		6
5	PJ00000906001400	垫圈14.5×32×5	Washer 14.5×32×5		1
6	P033000244130000	螺母M14×1.5	Nut M14×1.5		1
7	BGB9074.14-M6×30	组合螺栓M6×30	Combined Bolts M6×30		3
8	P033000311200611	定子组合1200	Generator Stator Assy	Y	1
9	BGB70-M5×12	内六角螺钉M5×12	Hexagon Socket Head Bolt M5×12		2
10	BGB93-5	弹垫5	Spring Washer Ø5		2
11	P004000110040000	定子线护板	Stator Wire Guard Plate		1
12	BGB5787-M6×16	六角法兰面螺栓M6×16	Hexagon Flange Bolt M6×16		4
13	P033000110040000	定子线护板	Stator Wire Guard Plate		1

十七、水泵 WATER PUMP

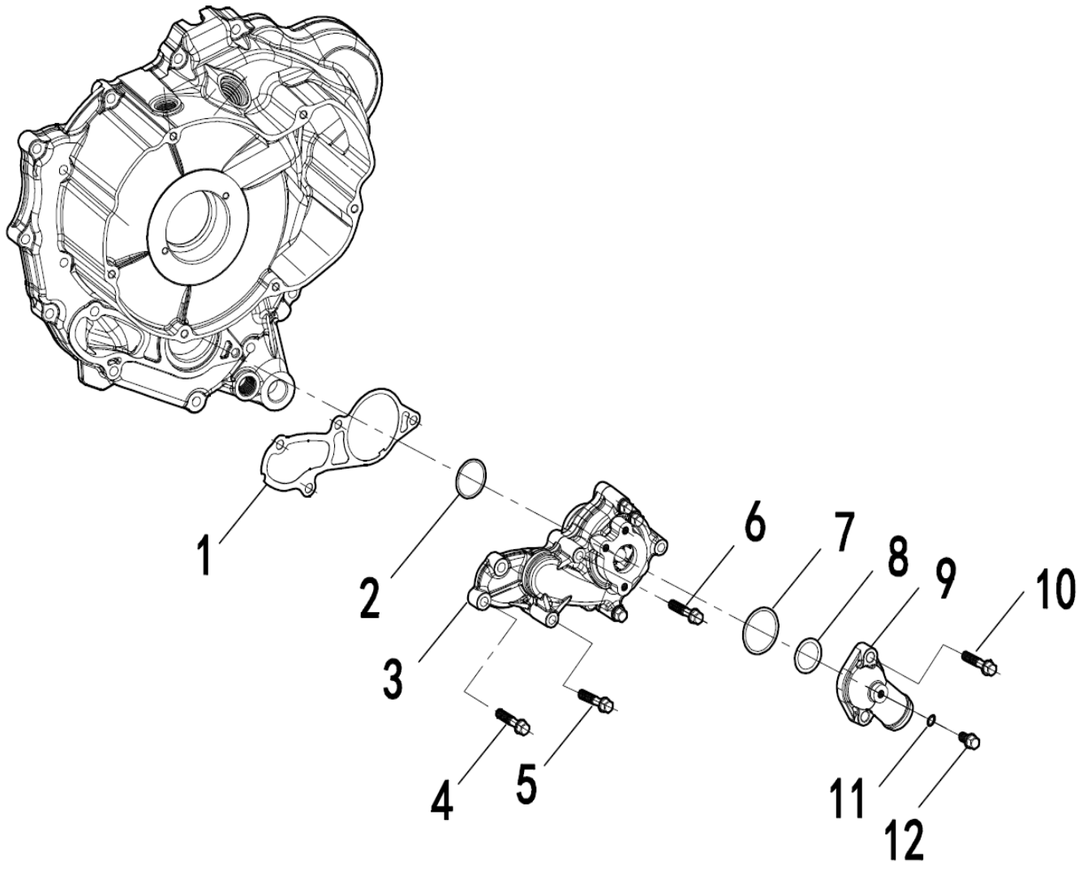

序号 No.	ERP编码 ERP Number	零部件名称及规格 Description In Chinese	Description in English		数量 Q'ty
1	P033000197220000	水泵密封垫	Water Pump sealing gasket	Y	1
2	PJ00000912014500	水泵O形密封圈32.4×2.5	O-Ring 32.4×2.5	Y	1
3	P030000197001000	水泵部件	Water Pump Assy		1
4	BGB5787-M6×25	六角法兰面螺栓M6×25	Hexagon Flange Bolt M6×25		1
5	BGB5787-M6×70	六角法兰面螺栓M6×70	Hexagon flange bolt M6×70		1
6	BGB5787-M6×45	六角法兰面螺栓M6×45	Hexagon flange bolt M6×45		3
~~7~~	~~P010000194110000~~	~~节温器盖密封圈 1PK-N770C-4~~	~~Seal,thermostat cover~~	~~Y~~	~~1~~
8	P013000197020000	水泵盖密封垫			
9	P034000190090000	节温器盖	Cover,Thermostat		1
10	BGB70-M6×20	内六角圆柱头螺钉M6×20	Hexagon Socket Head Screws M6×20		2
11	PJ00000906010100	铝垫圈6×12×1.5	Aluminum Washer 6×12×1.5		1
12	BGB5787-M6×12	六角法兰面螺栓M6×12	Hexagon Flange Bolt M6×12		1