一、气缸头总成 CYLINDER HEAD ASSY

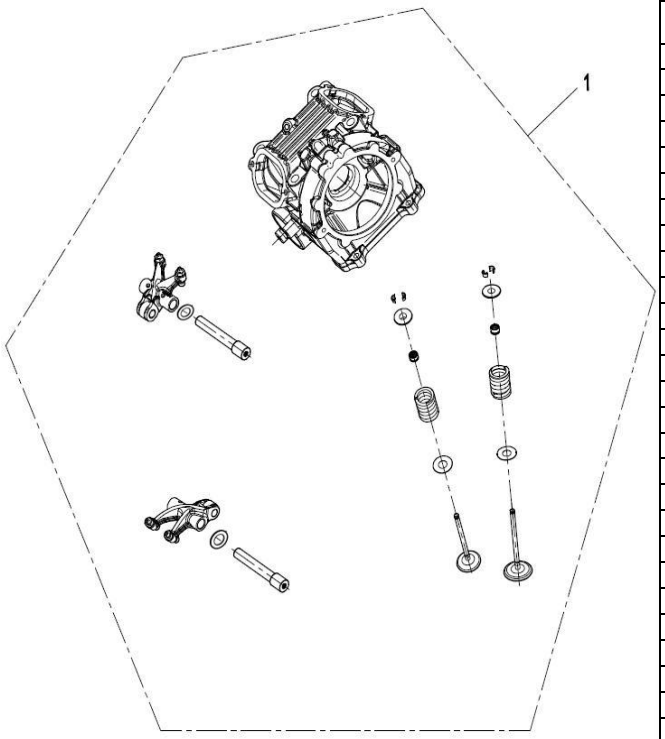

一、气缸头总成 CYLINDER HEAD ASSY						
序号 No.	零部件图号 Part No.	ERP编码	零部件名称及规格	Part Name And Standard	数量 Q'ty	备注ReMark
1	12200-033000-0000	P033000122000000	气缸头总成	Cylinder Head Assembly	1	

二、气缸头CYLINDER HEAD

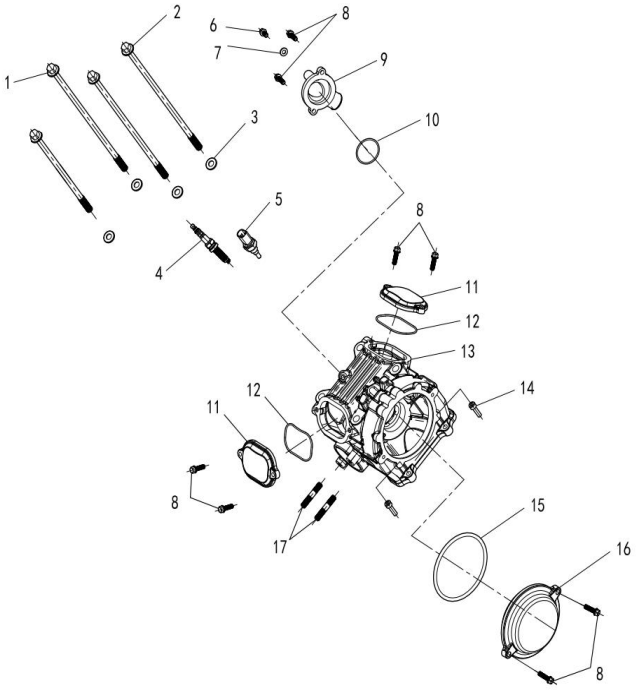

二、气缸头CYLINDER HEAD

序号 No.	零部件图号 Part No.	ERP编码	零部件名称及规格	Part Name And Standard	数量 Q'ty	备注ReMark
1	11012-033000-0000	P033000110120000	气缸螺栓M10×1.25×250	Cylinder bolts M10×1.25×250	2	
2	11018-033000-0000	P033000110180000	气缸螺栓M10×1.25×261	Cylinder bolts M10×1.25×261	2	
3	90602-J00000-0400	PJ00000906020400	铜垫圈10×18×2	Copper Washer 10×18×2	4	
4	33300-010000-0000	P010000333000000	火花塞(NGK DCPR7E)	Spark Plug NGK DCPR7E	1	
5	39130-033000-0000	P033000391300000	水温传感器	Water Temperature Sensor	1	
6	GB/T5787-M6×12	BGB 5787-M6×12	六角法兰面螺栓M6×12		1	
7	90601-J00000-0100	PJ00000906010100	铝垫圈6×12×1.5		1	
8	GB/T5787-M6×20	BGB5787-M6×20	六角法兰面螺栓M6×20	Hexagon Flange Bolts M6×20	8	
9	19009-036100-0000	P036100190090000	节温器盖		1	
10	19411-004000-0000	P004000194110000	节温器盖O形密封圈		1	
11	12301-030000-0000	P030000123010000	气门盖	Cover,Valve	2	
12	91201-J00000-6600	PJ00000912016600	O形密封圈64.4×3.1	O-Ring 64.4×3.1	2	
13	1220A-033000-0000	P033000122OA0000	气缸头组合	Cylinder Head Assy	1	
14	GB/T70-M6×25	BGB70-M6×25	内六角圆柱头螺钉M6×25	Hexagon Socket Head Cap Screws M6×25	2	
15	91201-J00000-7400	PJ00000912017400	O形密封圈90×3	O-Ring 90×3	1	
16	12321-030000-0000	P030000123210000	气缸头左盖	Cover,Cylinder Head,Left	1	
17	GB/T901-M8×45	BGB901-M8×45	双头螺柱M8×45（不锈钢）	Stud M8×45(SUS)	2	

三、进气管

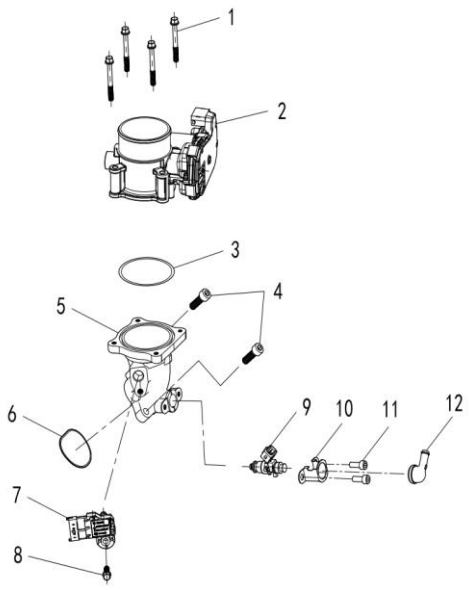

三、进气管						
序号 No.	零部件图号 Part No.	ERP编码	零部件名称及规格	Part Name And Standard	数量 Q'ty	备注ReMark
1	BG/T 5787-M6×50	BGB5787-M6×50	六角法兰面螺栓M6×50	Hexagon Flange Bolts M6×50	4	
2	16600-33-10	331660010	电子节气门总成		1	
3	91201-J00000-5900	PJ00000912015900	O形密封圈56.75×3.53	O-Ring 56.75×3.53	1	
4	GB/T70.1-M8×25	BGB70.1-M8×25	内六角圆柱头螺栓M8×25	Hexagon Socket Head Cap Screws M8×25	2	
5	12411-033000-0000	P033000124110000	进气管		1	
6	91201-J00000-5200	PJ00000912015200	O形密封圈45×2.5	O-Ring 45×2.5	1	
7	39150-033000-0200	P033000391500200	进气温度/压力传感器	Temperature/Pressure Sensor	1	
8	GB/T 5787-M6×20	BGB5787-M6×20	六角法兰面螺栓M6×20	Hexagon Flange Bolts M6×20	1	
9	16530-033000-0000	P033000165300000	喷油器	Fuel Injector	1	
10	16431-007000-0000	P007000164310000	喷油器压板	Fuel injector clamp	1	
11	GB/T70-M6×16	BGB70-M6×16	内六角圆柱头螺栓M6×16	Hexagon Socket Head Cap Screws M6×16	2	
12	16430-007000-0003	P007000164300003	喷油器固定座III	Fixed Seat Ⅲ,Fuel Injector	1	

四、气门VALVE	四、气门VALVE						
	序号 No.	零部件图号 Part No.	ERP编码	零部件名称及规格	Part Name And Standard	数量 Q'ty	备注ReMark
	1	14711-033000-0000	P033000147110000	进气门	Intake Valve	2	
	2	14721-033000-0000	P033000147210000	排气门	Exhaust Valve	2	
	3	14702-010000-0000	P010000147020000	气门弹簧垫圈	Valve Spring Seat	4	
	4	14703-033000-0000	P033000147030000	气门弹簧（排气）	Spring,Valve	2	
	5	14704-013000-0000	P013000147040000	气门弹簧（进气）		2	
	6	14705-013000-0000	P013000147050000	挡油罩组件		2	
	7	14707-013000-0000	P013000147070000	气门弹簧座	Retainer,Valve Spring	4	
	8	14713-013000-0000	P013000147130000	气门锁夹	Valve Lock Keeper	8	
	9	14403-033000-0000	P033000144030000	摇臂轴	Rockershaft	2	
	10	1441A-033000-0000	P033000144 1A0000	进气摇臂组合		1	
	11	1442A-033000-0000	P033000144 2A0000	排气摇臂组合		1	
=DISPIMG("ID_CBE0766309E646BD8887EC19307CD846",1)	12	90604-J00000-0600	PJ00000906040600	波形垫圈12.5×16×0.4		2	

五、气缸体CYLINDER

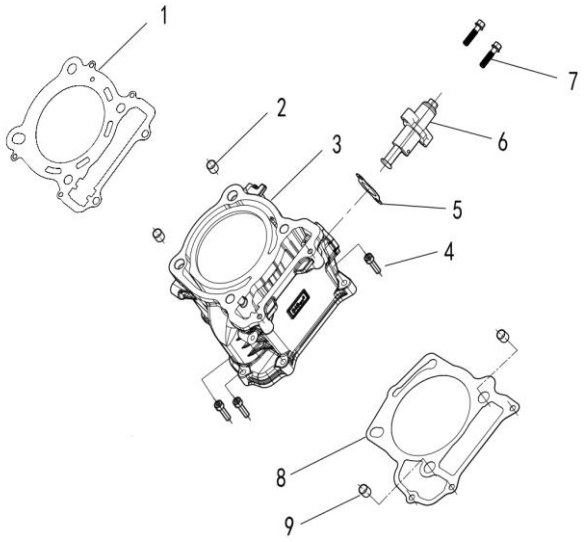

五、气缸体CYLINDER						
序号 No.	零部件图号 Part No.	ERP编码	零部件名称及规格	Part Name And Standard	数量 Q'ty	备注ReMark
1	1207A-034100-0000	P0341001207A0000	气缸头密封垫	Gasket,Cylinder Head	1	
2	90802-J00000-0400	PJ00000908020400	定位销12×16	Pin,Dowel 14×16	2	
3	1211A-034000-0000	P0340001211A0000	气缸组合	Cylinder Body Assy	1	
4	GB/T70-M6×30	BGB70-M6×30	内六角圆柱头螺钉M6×30	Hexagon Socket Head Cap Screws M6×30	3	
5	14508-002000-0000	P002000145080000	张紧器密封垫	Gasket,Tensioner	1	
6	14530-002000-0000	P002000145300000	张紧器组合	Tensioner Assy.	1	
7	GB/T70-M6×25	GB/T70-M6×25	内六角圆柱头螺钉M6×25	Hexagon Socket Head Cap Screws M6×25	2	
8	12009-033000-0000	P033000120090000	气缸体密封垫	Gasket,Cylinder Base	1	
9	90802-J00000-0600	PJ00000908020600	定位销14×16	Pin,Dowel 14×16	2	

六、凸轮轴CAMSHAFT CHAIN

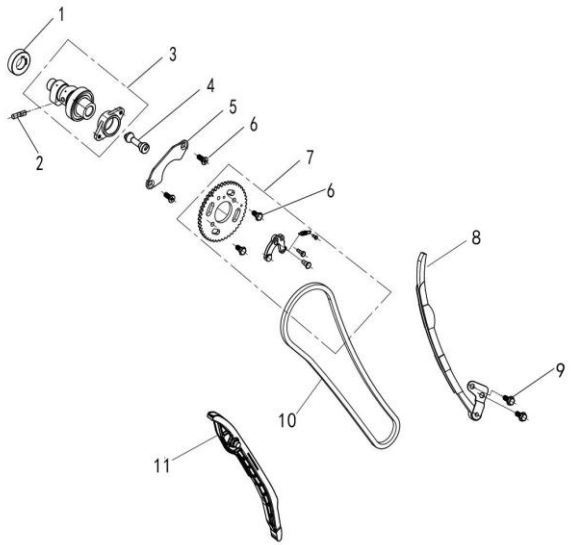

六、凸轮轴CAMSHAFT CHAIN

序号 No.	零部件图号 Part No.	ERP编码	零部件名称及规格	Part Name And Standard	数量 Q'ty	备注ReMark
1	GB/T276-6003Z	BGB276-6003Z	轴承6003Z	Bearing 6003Z	1	
2	14114-033000-0000	P033000141140000	减压销		1	
3	14100-034000-0000	P034000141000000	凸轮轴部件		1	
4	14115-033000-0000	P033000141150000	转销			
5	14306-033000-0000	P033000143060000	凸轮轴限位板		1	
6	GB/T5783-M6×12-F	BGB5783-M6×12-F	六角头螺栓M6×12		2	
7	1431A-036000-0000	P0360001431A0000	正时从动链轮组合	Camshaft Sprocket Assy	1	
11	1452B-033000-0000	P033000452B0000	链条导向板	Timing Chain Guide	1	
9	GB/T9074.14-M6×16	BGB9074.14-M6×16	组合螺栓M6×16		2	
10	14302-034000-0000	P034000143020000	正时链条M7-6.35-122	Timing Chain M7-6.35-122	1	
8	1451B-004000-0000	P0040001451B0000	链条张紧板	Timing Chain Tensioner Guide	1	

七、活塞连杆CRANKSHAFT PISTON

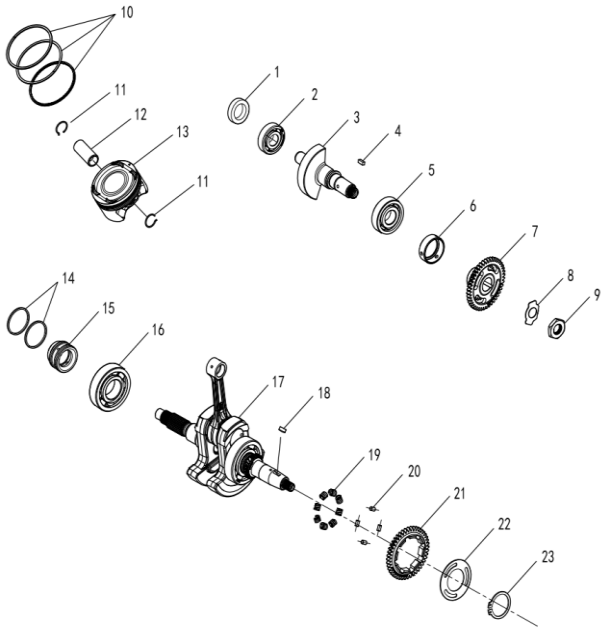

七、活塞连杆CRANKSHAFT PISTON

序号 No.	零部件图号 Part No.	ERP编码	零部件名称及规格	Part Name And Standard	数量 Q'ty	备注ReMark
1	91101-J00000-2100	PJ00000911012100	油封20×30×7		1	
2	GB/T276-6304	BGB276-6304	轴承6304	Bearing 6304	1	
3	1331A-034000-0000	P0340001331A0000	平衡轴组合	Balance Shaft	1	
4	GB/T1096-B5×12.4	BGB1096-B5×12.4	平建B5×12.4		1	
5	GB/T276-6305	BGB276-6305	轴承6305	Bearing 6305	1	
6	13327-016000-0000	P016000133270000	平衡从动齿轮衬套		1	
7	1332A-030000-0000	P0300001332A0000	平衡从动齿组件		1	
8	90603-J00000-0400	PJ00000906030400	止退垫圈B		1	
9	90402-J00000-1000	PJ00000904021000	螺母M18×1	Hexagon Nut M18×1	1	
10	1311A-012000-0000	P0120001311A0000	活塞环组件	Piston Ring Set	1	
11	13107-038000-0000	P038000131070000	活塞销挡圈	Circlip,Piston Pin	2	
12	13102-034000-0000	P034000131020000	活塞销	Piston Pin	1	
13	13101-038000-0000	P038000131010000	活塞	Piston	1	
14	11024-003000-0000	P003000110240000	密封环		2	
15	11023-004000-0000	P004000110230000	密封环套		1	
16	GB/T276-6307	BGB276-6307	轴承6307	Bearing 6307	1	
17	13200-034000-0000	P034000132000000	曲轴连杆部件		1	
18	13001-004000-0000	P004000130010000	半圆键	Key	1	
19	13325-004000-0000	P004000133250000	平衡主动齿轮缓冲簧	Buffer Spring,Balance Gear	8	
20	13326-004000-0000	P004000133260000	平衡主动齿圈限位销	Spacer Pin,Balance Gear	4	
21	13322-004000-0000	P004000133220000	平衡主动齿轮	Driving Gear,Balance Shaft	1	
22	13324-004000-0000	P004000133240000	平衡主动齿右定位板		1	
23	GB/T894.1-35	BGB894.1-35	轴用弹性挡圈ϕ35		1	

八、曲轴箱CRANKCASE

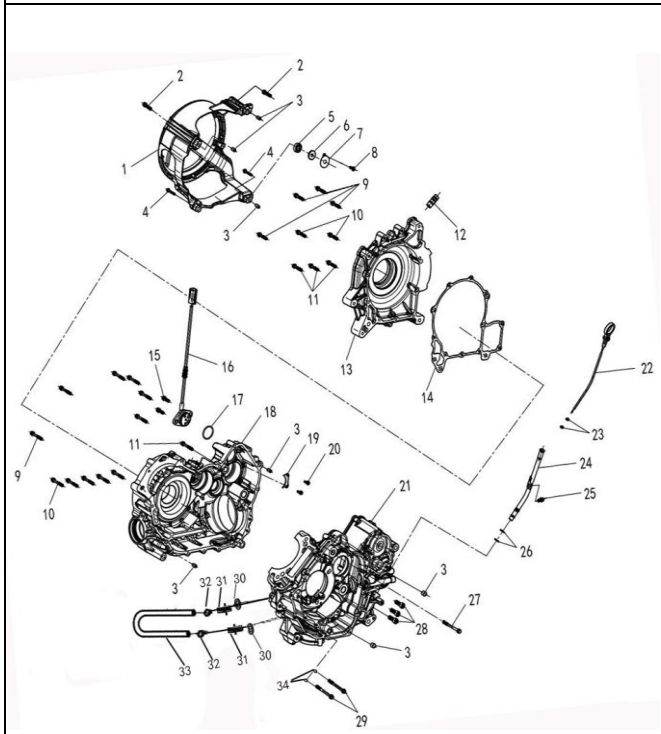

八、曲轴箱CRANKCASE						
序号No	Part No.	存货编码HisunInventoryCode	零部件名称及规格	Part Name And Standard	数量Q'TY	REMARK
1	11331-033000-0000	P033000113310000	离合器护罩支架	Shield Bracket,Clutch	1	
2	GB/T5787-M8×40	GB/T5787-M8×40	六角法兰面螺栓M8×40	Hexagon Flange Bolts M8×40	2	
3	90802-J00000-0300	PJ00000908020300	定位销10×16		8	
4	GB/T5787-M8×70	BGB5787-M8×70	六角法兰面螺栓M8×70	Hexagon Flange Bolts M8×70	2	
5	GB/T276-62012Z	BGB276-62012Z	轴承6201 2Z	Bearing 6201 2Z	1	
6	91101-J00000-1200	PJ00000911011200	油封12×32×6	Oil Seal 12×32×6	1	
7	11032-004000-0000	P004000110320000	支架油封压板		1	
8	GB/T5787-M6×16	BGB5787-M6×16	六角法兰面螺栓M6×16	Hexagon Flange Bolts M6×16	1	
9	GB/T5787-M6×45	BGB5787-M6×45	六角法兰面螺栓M6×45	Hexagon Flange Bolts M6×45	14	
10	GB/T5787-M6×50	BGB5787-M6×50	六角法兰面螺栓M6×50	Hexagon Flange Bolts M6×50	3	
11	GB/T5787-M6×35	BGB5787-M6×35	六角法兰面螺栓M6×35	Hexagon Flange Bolts M6×35	4	
12	11204-004000-0000	P004000112040000	通气管接头		1	
13	11311-035000-0000	P035000113110000	右曲轴箱盖		1	
14	11017-033000-0000	P033000110170000	右曲轴箱盖密封垫		1	
15	GB/T9074.14-M6×16	BGB9074.14-M6×16	组合螺栓M6×16		2	
16	36550-033000-0000	P033000365500000	档显传感器		1	
17	91201-J00000-3800	PJ00000912013800	O形密封圈29.6×2.4		1	
18	1110A-033000-0000	P033000110A00000	右曲轴箱组合	Right Crankcase Assy	1	
19	11013-004000-0000	P004000110130000	主轴承压板		1	
20	GB/T 5787-M6×16	GB/T 5787-M6×16	六角法兰面螺栓M6×16	Hexagon Flange Bolts M6×16	2	
21	1120A-033000-0000	P033000112OA0000	左曲轴箱组合	Left Crankcase Assy	1	
22	15650-033000-0000	P033000156500000	机油标尺组合		1	
23	91201-J00000-0200	PJ00000912010200	O形密封圈6×2		2	
24	00630-033000-0000	P033000006300000	机油尺导向管		1	
25	GB/T 5787-M6×12	BGB5787-M6×12	六角法兰面螺栓M6×12		1	
26	91201-J00000-0700	PJ00000912010700	O形密封圈9×2		2	
27	GB/T5787-M6×85	BGB5787-M6×85	六角法兰面螺栓M6×85	Hexagon Flange Bolts M6×85	1	
28	GB/T70-M8×40	BGB70-M8×40	内六角圆柱头螺钉M8×40	Hexagon Socket Head Cap Screws M8×40	3	
29	GB/T5787-M6×75	BGB5787-M6×75	六角法兰面螺栓M6×75	Hexagon Flange Bolts M6×75	2	
30	90601-J00000-0700	PJ00000906010700	铝垫圈14×20×1.5		2	
31	11105-003000-0000	P003000111050000	油管接头		2	
32	90730-J00000-0000	PJ00000907300000	螺钉锁紧抱箍A Ø12～Ø20		2	
33	15307-014000-2200	P014000153072200	橡胶油管2200		1	
34	90601-J00000-0100	PJ00000906010100	铝垫圈6×12×1.5		2	

九、曲轴箱盖CRANKCASE COVER 1

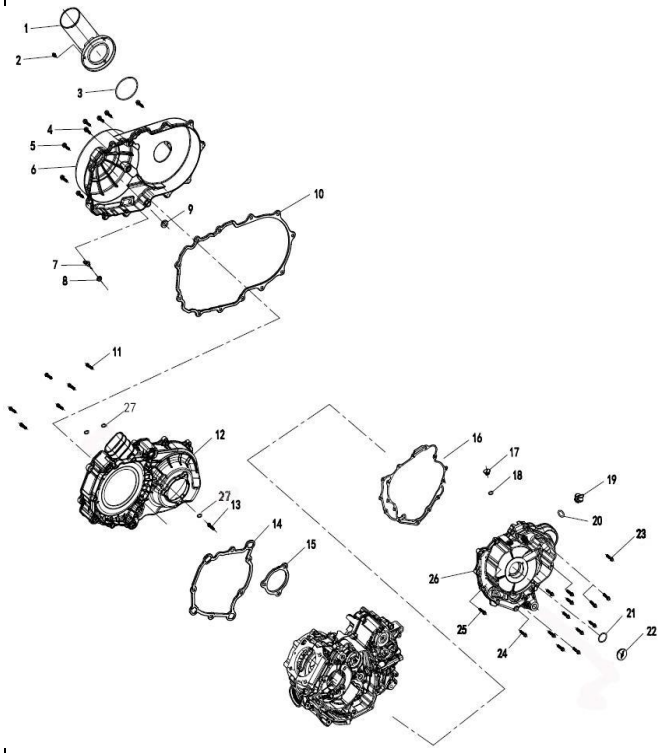

九、曲轴箱盖CRANKCASE COVER 1						
序号 No.	零部件图号 Part No.	ERP编码	零部件名称及规格	Part Name And Standard	数量 Q'ty	备注ReMark
1	11521-033000-0000	P033000115210000	离合器盖进气管			
2	GB/T 5787-M6×12	BGB5787-M6×12	六角法兰面螺栓M6×12		3	
3	91201-J00000-7200	PJ00000912017200	O形密封圈78×3		1	
4	GB/T5789-M6×25	BGB5789-M6×25	六角法兰面螺栓M6×25	Hexagon Flange Bolts M6×25	12	
5	GB/T5789-M6×20	BGB5789-M6×20	六角法兰面螺栓M6×20	Hexagon Flange Bolts M6×20	2	
6	1152A-033000-0000	P0330001152A0000	离合器盖组合	Cover,Clutch,Outer	1	
7	11504-003000-0000	P003000115040000	离合器盖堵头	Drain Plug,Clutch Cover	1	
8	11503-003000-0000	P003000115030000	胶套	Damper	1	
9	93110-J00000-0200	PJ00000931100200	橡胶平垫φ12×φ25×5.5		1	
10	11523-033000-0000	P033000115230000	离合器盖密封圈		1	
11	BGB5789-M6×32	BGB5789-M6×32	六角法兰面螺栓M6×32		6	
12	1151A-033000-0000	P0330001151A0000	离合器盖座组合	Cover,Clutch,Inner	1	
13	GB/T5789-M6×50	BGB5789-M6×50	六角法兰面螺栓M6×50		2	
14	11511-033000-0000	P033000115110000	离合器盖座密封圈Ⅰ	Seal,Clutch Inner Cover Ⅰ	1	
15	11512-033000-0000	P033000115120000	离合器盖座密封圈Ⅱ	Seal,Clutch Inner Cover Ⅱ	1	
16	11402-033000-0000	P033000114020000	左前盖密封垫		1	
17	11002-003000-0000	P003000110020000	小视孔盖	Small Peep Hole Cover	1	
18	91201-J00000-1400	PJ00000912011400	O形密封圈13.4×2.35	O-Ring 13.4×2.35	1	
19	15651-001000-0000	P001000156510000	机油塞(M20×2.5)		1	
20	91201-J00000-2400	PJ00000912012400	O形密封圈18×3.5	O-Ring 18×3.5	1	
21	91201-J00000-3700	PJ00000912013700	O形密封圈27.4×2.4	O-Ring 27.4×2.4	1	
22	11003-010000-0000	P010000110030000	大视孔盖	Big Peep Hole Cover	1	
23	GB/T5787-M6×30	BGB5787-M6×30	六角法兰面螺栓M6×30		8	
24	GB/T 5787-M6×40	BGB5787-M6×40	六角法兰面螺栓M6×40		4	
25	GB/T 5787-M6×35	BGB5787-M6×35	六角法兰面螺栓M6×35		2	
26	11401-030000-0000	P030000114010000	左前盖		1	
27	BGB93-6	BGB93-6	Φ6 弹垫		8	

十、传动系TRANSMISSION

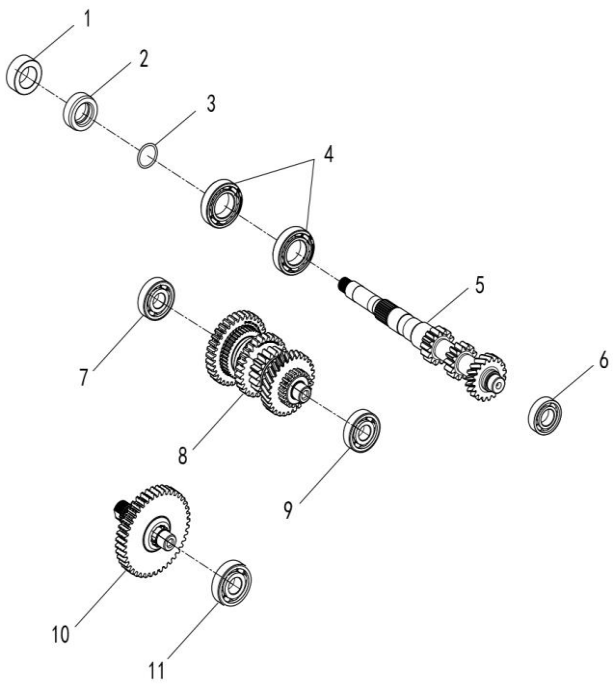

十、传动系TRANSMISSION

序号 No.	零部件图号 Part No.	ERP编码	零部件名称及规格	Part Name And Standard	数量 Q'ty	备注ReMark
1	91101-J00000-1400	PJ00000911011400	油封ϕ42×ϕ55×8		1	
2	21106-003000-0000	P003000211060000	次级CVT衬套(26×42×14.7)		1	
3	91201-J00000-3500	PJ00000912013500	O形密封圈26.1×2.4		1	
4	GB/T276-6006	BGB276-6006	轴承6006		2	
5	22201-030000-0000	P030000222010000	传动主轴		1	
6	GB/T276-6004	BGB276-6004	轴承6004		1	
7	GB/T276-6203	BGB276-6203	轴承6203		1	
8	22260-030000-0000	P030000222600000	副轴组合		1	
9	GB/T276-6204Z	BGB276-6204Z	轴承6204Z		1	
10	22280-030000-0000	P030000222800000	X传动轴组合		1	
11	GB/T276-6304	BGB276-6304	轴承6304		1	

十一、中间传动系MIDDLEDRIVEGEAR

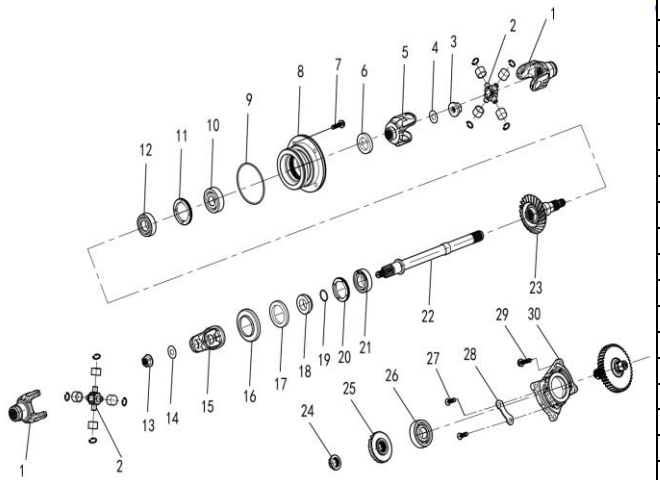

十一、中间传动系MIDDLEDRIVEGEAR						
序号 No.	零部件图号 Part No.	ERP编码	零部件名称及规格	Part Name And Standard	数量 Q'ty	REMARK
1	25400-J00000-2401	PJ00000254002401	节叉Z(Ø25)	U-joint Z(Ø25)	2	
2	25500-J00000-0400	PJ00000255000400	十字节部件		2	
3	GB/T6187.2-M16	BGB6187.2-M16	自锁螺母M16×1.5	Nut Lock M16×1.5	1	
4	90600-J00000-3200	PJ00000906003200	垫圈16.5×28×4		1	
5	25400-J00000-2101	PJ00000254002101	节叉W(Ø25)		1	
6	91101-J00000-1600	PJ00000911011600	油封30×46×8	Oil Seal 30×46×8	1	
7	GB/T9074.14-M8×30	BGB9074.14-M8×30	组合螺栓M8×30	Hexagon Head Bolt And Plain Washer Asse	4	
8	11111-004000-0000	P004000111110000	Y轴承座	Y Shaft Bearing Block	1	
9	91201-J00000-7300	PJ00000912017300	O形密封圈88×2.8	O-Ring 88×2.8	1	
10	GB/T276-63/22	BGB276-63/22	轴承63/22	Bearing 63/22	1	
11	11112-004000-0000	P004000111120000	锁紧环M60×1.5	Nut M60×1.5	1	
12	GB/T276-6207	BGB276-6207	轴承6207	Bearing 6207	1	
13	GB/T6187.2-M14	BGB6187.2-M14	自锁螺母M14×1.5	Nut Lock M14×1.5	1	
14	90600-J00000-1400	PJ00000906001400	垫圈14.5×32×5		1	
15	25400-J00000-2201	PJ00000254002201	节叉X(Ø25)		1	
16	22192-004000-0000	P004000221920000	前驱联轴器护罩		1	
17	91101-J00000-2300	PJ00000911012300	油封44×60×7	Oil Seal 44×60×7	1	
18	22433-033000-0000	P033000224330000	轴套25×44×15		1	
19	91201-J00000-3300	PJ00000912013300	O形密封圈25×2.4		1	
20	11113-003000-0000	P003000111130000	锁紧环M55	Nut M55	1	
21	GB/T276-6205	BGB276-6205	轴承6205	Bearing 6205	1	
22	22404-033000-0000	P033000224040000	Y传动轴	Y Driveshaft	1	
23	22402-004000-0000	P004000224020000	从动锥齿轮	Driven Bevel Gear	1	
24	90402-J00000-1400	PJ00000904021400	螺母M22×1		1	
25	22401-004000-0100	P004000224010100	主动锥齿轮		1	
26	GB/T276-6305	BGB276-6305	轴承6305		1	
27	GB/T819.2-M8×25	BGB819.2-M8×25	十字槽沉头螺钉M8×25		4	
28	93116-003000-0000	P003000931160000	X轴承座压板		2	
29	GB/T5787-M8×30	BGB5787-M8×30	六角法兰面螺栓M8×30		4	
30	11211-030000-0000	P030000112110000	X轴承座		1	

十二、离合器CLUTCH

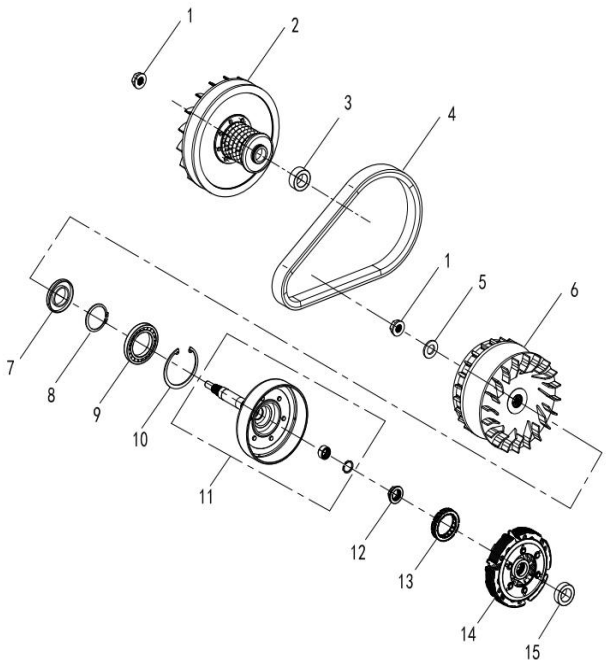

十二、离合器CLUTCH						
序号 No.	零部件图号 Part No.	ERP编码	零部件名称及规格	Part Name And Standard	数量 Q'ty	备注ReMark
1	90402-J00000-0700	PJ00000904020700	螺母M16×1		2	
2	21200-033000-0100	P033000212000100	次级离合器部件		1	
3	21106-030000-0000	P030000211060000	次级CVT衬套		1	
4	21300-004000-0000	P004000213000000	CVT皮带部件		1	
5	90600-J00000-1700	PJ00000906001700	垫圈19.2×35×3.2		1	
6	2116A-033000-0000	P0330002116A0000	初级移动盘组合		1	
7	91101-J00000-2200	PJ00000911012200	油封35×65×9		1	
8	GB/T894.1-52	BGB894.1-52	轴用弹性挡圈ф52		1	
9	GB/T276-16010	BGB276-16010	轴承16010		1	
10	GB/T893-80	BGB893-80	孔用弹性挡圈ф80		1	
11	2114A-033000-0000	P0330002114A0000	踏块从动盘组合		1	
12	90402-J00000-1400	PJ00000904021400	螺母M22×1		1	
13	2113A-004000-0000	P0040002113A0000	超越离合器组合		1	
14	2111A-004000-0150	P0040002111A0150	踏块组合		1	
15	21105-035000-0000	P035000211050000	初级CVT衬套		1	

十三、换档凸轮,拨叉SHIFTCAM FORK

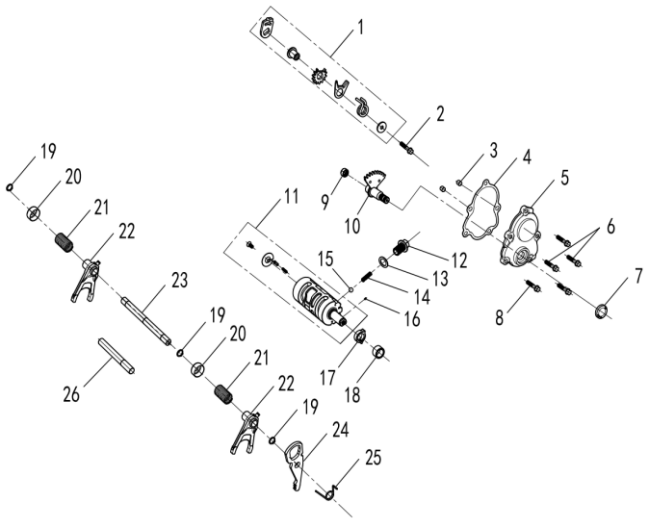

十三、换档凸轮,拨叉SHIFTCAM FORK

序号No	Part No.	存货编码HisunInventoryCode	零部件名称及规格	Part Name And Standard	数量Q'TY	REMARK
1	2321A-034000-0000	P0340002321A0000	变速拨板组合		1	
2	GB/T 5787-M6×35	BGB 5787-M6×35	六角法兰面螺栓M6×35		1	
3	90802-J00000-0100	PJ00000908020100	定位销φ8×φ6.5×12		2	
4	11422-033000-0000	P033000114220000	换档臂侧盖密封垫	Gasket,Shiftshaft Cover	1	
5	11421-030000-0000	P030000114210000	换档臂侧盖	Shiftshaft Cover	1	
6	GB/T5787-M6×25	BGB5787-M6×25	六角法兰面螺栓M6×25		2	
7	91101-J00000-1000	PJ00000911011000	油封15×25×5	Oil Seal 15×25×5	1	
8	GB/T5787-M6×20	BGB5787-M6×20	六角法兰面螺栓M6×20		3	
9	93700-012168-0000	P012168937000000	滚针轴承HK12168		1	
10	2333A-033000-0000	P0330002333A0000	换档主动扇齿组件		1	
11	~~23200-033000-0000~~	~~P033000232000000~~	~~变速鼓部件~~	~~Variable speed drum component~~	~~1~~	
	~~23200-033000-0001~~	~~P033000232000001~~	~~变速鼓部件~~	~~Variable speed drum component~~		~~取消φ8孔,凸台加大至22~~
	23201-03300-0002	P033000232010002	变速鼓部件	Variable speed drum component	1	H技字【2025年】第 467 号,m6螺纹处通孔变为长25盲孔
12	23315-003000-0000	P003000233150000	空芯螺栓M14×1.5×21		1	
13	90602-J00000-0700	PJ00000906020700	铜垫圈14×21×1		1	
14	23302-002000-0000	P002000233020000	变速轴复位弹簧		1	
15	GB/T308-9.5	BGB308-9.5	钢球SΦ9.5		1	
16	90801-J00000-1100	PJ00000908011100	圆柱销φ2.5×13.8		1	
17	23203-033000-0000	P033000232030000	驻车凸轮		1	
18	23209-033000-0000	P033000232090000	衬套Ø15×Ø20×11.6		1	
19	GB/T894.1-12	BGB894.1-12	轴用弹性挡圈φ12		3	
20	23106-004000-0000	P004000231060000	拨叉轴簧座	Spring Seat,Shift Rail	2	
21	23107-034000-0000	P034000231070000	R档弹簧	Spring, R Gear	2	
22	2311A-033000-0000	P0330002311A0000	拨叉组合		2	
23	23131-033000-0000	P033000231310000	拨叉轴	Shift Rail	1	
24	23351-033000-0000	P033000233510000	驻车臂		1	
25	23353-033000-0000	P033000233530000	驻车臂扭簧		1	
26	23352-004000-0000	P004000233520000	驻车臂轴		1	

十四、机油泵OIL PUMP

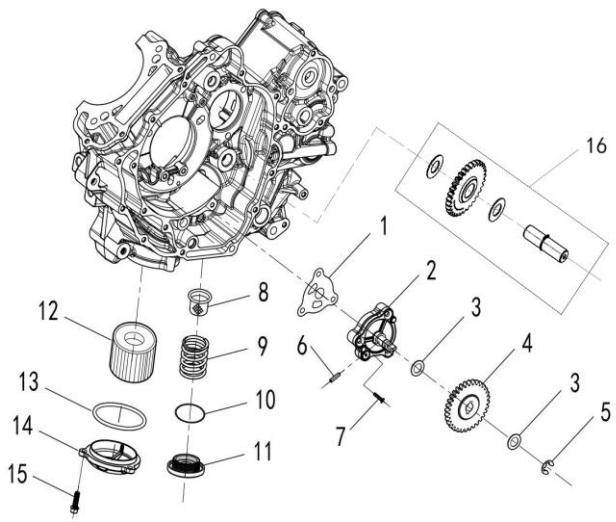

十四、机油泵OI LPUMP（配新箱体状态）						
序号No	Part No.	存货编码HisunInventoryCode	零部件名称及规格	Part Name And Standard	数量Q'TY	REMARK
1	15101-010000-0000	P010000151010000	机油泵密封垫		1	
2	15110-036100-0000	P036100151100000	油泵组合		1	
3	15154-010000-0000	P010000151540000	垫圈φ11.3×18		2	
4	15116-030000-0000	P030000151160000	油泵从动齿轮		1	
5	GB/T896-9	BGB896-9	开口挡圈9		1	
6	90801-J00000-0700	PJ00000908010700	油泵定位销φ4×16		2	
7	GB/T819.1-M6×35	BGB819.1-M6×35	十字槽沉头螺钉M6×35		3	
8	15203-002000-0000	P002000152030000	机油滤网		1	
9	15204-002000-0000	P002000152040000	滤网弹簧		1	
10	91201-J00000-4700	PJ00000912014700	O形密封圈36×3.5		1	
11	11107-002000-0100	P002000111070100	放油螺盖		1	
12	1521A-010000-0000	P010000152lA0000	机油滤清器组合		1	
13	91201-J00000-6400	PJ00000912016400	O形密封圈61.5×2.4		1	
14	15205-010000-0000	P010000152050000	机油滤清器盖		1	
15	GB/T 5787-M6×20	BGB5787-M6×20	六角法兰面螺栓M6×20		3	
16	03000-015120-0000	P030000151200000	油泵中间齿组合		1	

十六、电起动系 STARTER

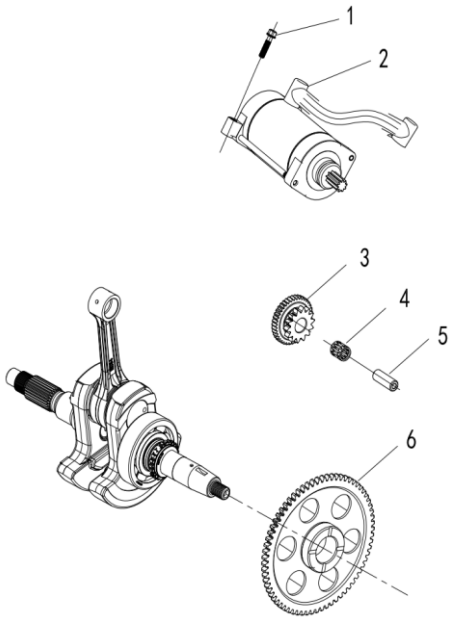

十六、电起动系 STARTER						
序号 No.	零部件图号 Part No.	ERP编码	零部件名称及规格	Part Name And Standard	数量 Q'ty	备注ReMark
1	GB/T5787-M6×30	BGB5787-M6×30	六角法兰面螺栓M6×30	Hexagon Flange Bolts M6×30	2	
2	31200-033000-0000	P033000312000000	起动电机部件		1	
3	24503-033000-0000	P033000245030000	双联齿轮		1	
4	93700-121618-0000	P121618937000000	滚针轴承KBK121618		1	
5	24504-004000-0000	P004000245040000	双联齿轮轴		1	
6	2440A-035000-0000	P0350002440A0000	盘形齿轮组合		1	

十七、磁电机 GENERATOR

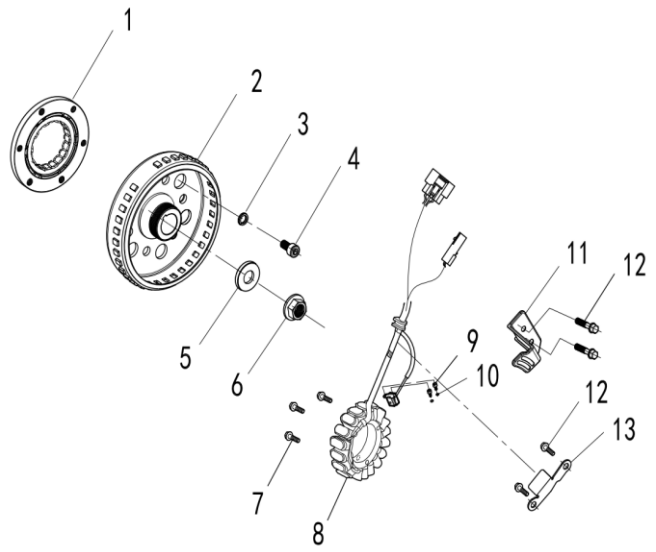

十七、磁电机 GENERATOR

序号 No.	零部件图号 Part No.	ERP编码	零部件名称及规格	Part Name And Standard	数量 Q'ty	备注ReMark
1	~~24310-002000-0000~~	~~P002000243100000~~	~~起~~动离合器组件		~~1~~	
	24310-004000-0000	P004000243100000	起动离合器组件		1	2026.2.2改
2	31110-033000-0000	P033000311100000	转子组合		1	
3	GB/T93-8	BGB93-8	弹垫φ8		6	
4	GB/T70-M8×16	BGB70-M8×16	内六角圆柱头螺钉M8×16		6	
5	90600-J00000-1400	PJ00000906001400	垫圈14.5×32×5		1	
6	24413-033000-0000	P033000244130000	螺母M14×1.5		1	
7	GB/T9074.14-M6×30	BGB9074.14-M6×30	组合螺栓M6×30	Hexagon Head Bolt And Plain Washer Asse	3	
8	31120-033000-0601	P033000311200601	定子组合	Generator Stator Assy	1	
9	GB/T70-M5×12	BGB70-M5×12	内六角螺钉M5×12		2	
10	GB/T93-5	BGB93-5	弹垫5	Spring Washer Ø5	2	
11	11004-004000-0000	P004000110040000	定子线护板		1	
12	GB/T 5787-M6×16	BGB5787-M6×16	六角法兰面螺栓M6×16	Hexagon Flange Bolts M6×16	4	
13	11004-033000-0000	P033000110040000	定子线护板		1	

十八、水泵 WATER PUMP

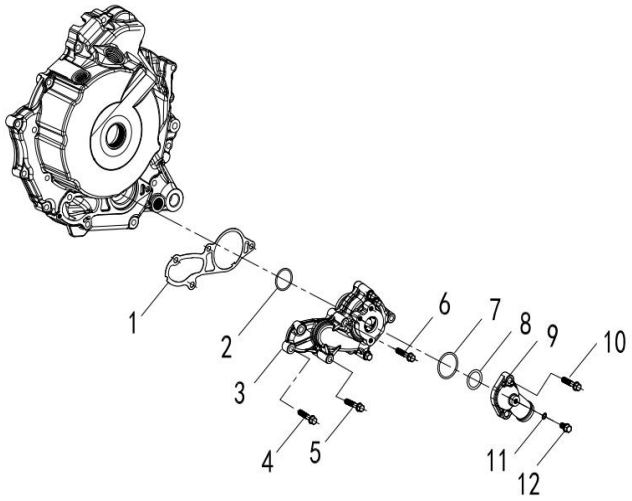

十八、水泵 WATER PUMP						
序号 No.	零部件图号 Part No.	ERP编码	零部件名称及规格	Part Name And Standard	数量 Q'ty	备注ReMark
1	19722-033000-0000	P033000197220000	水泵密封垫		1	
2	91201-J00000-4500	PJ00000912014500	O形密封圈34.2×2.5		1	
3	19700-030000-0000	P030000197000000	水泵部件		1	
4	GB/T5787-M6×25	BGB5787-M6×25	六角法兰面螺栓M6×25		1	
5	GB/T 5787-M6×70	BGB5787-M6×70	六角法兰面螺栓M6×70		1	
6	GB/T 5787-M6×50	BGB5787-M6×50	六角法兰面螺栓M6×50		3	
7	~~19411-010000-0000~~	~~P010000194110000~~	~~节温器盖密封圈 1PK-N770C-4~~		~~1~~	取消， H 技字【2024 年】第 122 号2026.6.24改
8	~~90601-J00000-1300~~	~~PJ00000906011300~~	~~铝垫圈24×30×1~~		~~1~~	取消， H 技字【2024 年】第 122 号2026.6.24改
		P013000197020000	水泵盖密封垫			变更，H 技字【2024 年】第 122 号2026.6.24改
9	19009-038000-0000	P038000190090000	节温器盖		1	
10	BGB70-M6×20	BGB70-M6×20	内六角圆柱头螺钉M6×20		2	
11	90601-J00000-0100	PJ00000906010100	铝垫圈6×12×1.5		1	
12	GB/T 5787-M6×12	BGB5787-M6×12	六角法兰面螺栓M6×12		1	

附页1：气缸头总成明细表	气缸头总成 P033000122000000					
	序号 No.	零部件图号 Part No.	ERP编码	零部件名称及规格	Part Name And Standard	数量 Q'ty	备注ReMark
	1	33300-010000-0000	P010000333000000	火花塞(NGK DCPR7E)	Spark Plug NGK DCPR7E	1	
	2	39130-033000-0000	P033000391300000	水温传感器	Water Temperature Sensor	1	
	3	GB/T5787-M6×12	BGB 5787-M6×12	六角法兰面螺栓M6×12		2	
	4	90601-J00000-0100	PJ00000906010100	铝垫圈6×12×1.5		2	
	5	GB/T5787-M6×20	BGB5787-M6×20	六角法兰面螺栓M6×20	Hexagon Flange Bolts M6×20	8	
	6	19009-036100-0000	P036100190090000	节温器盖		1	
	7	19411-004000-0000	P004000194110000	节温器盖O形密封圈		1	
	8	12301-030000-0000	P030000123010000	气门盖	Cover,Valve	2	
	9	91201-J00000-6600	PJ00000912016600	O形密封圈64.4×3.1	O-Ring 64.4×3.1	2	
	10	1220A-033000-0000	P033001220A0000	气缸头组合	Cylinder Head Assy	1	
	11	91201-J00000-7400	PJ00000912017400	O形密封圈90×3	O-Ring 90×3	1	
	12	12321-030000-0000	P030000123210000	气缸头左盖	Cover,Cylinder Head,Left	1	
	13	GB/T901-M8×45	BGB901-M8×45	双头螺柱M8×45（不锈钢）	Stud M8×45(SUS)	2	
	14	14711-033000-0000	P033000147110000	进气门	Intake Valve	2	
	15	14721-033000-0000	P033000147210000	排气门	Exhaust Valve	2	
	16	14702-010000-0000	P010000147020000	气门弹簧垫圈	Valve Spring Seat	4	
	17	14703-033000-0000	P033000147030000	气门弹簧（排气）	Spring,Valve	2	
	18	14704-013000-0000	P013000147040000	气门弹簧（进气）		2	
	19	14705-013000-0000	P013000147050000	挡油罩组件		2	
	20	14707-013000-0000	P013000147070000	气门弹簧座	Retainer,Valve Spring	4	
	21	14713-013000-0000	P013000147130000	气门锁夹	Valve Lock Keeper	8	
	22	90604-J00000-0600	PJ00000906040600	波形垫圈12.5×16×0.4		2	
	23	14403-033000-0000	P033000144030000	摇臂轴	Rockershaft	2	
	24	1441A-033000-0000	P033001441A0000	进气摇臂组合		1	
	25	1442A-033000-0000	P033001442A0000	排气摇臂组合		1	
	26	GB/T276-6003Z	BGB276-6003Z	轴承6003Z	Bearing 6003Z	1	
	27	14100-034000-0000	P034000141000000	凸轮轴部件		1	
	28	14306-033000-0000	P033000143060000	凸轮轴限位板		1	
	29	GB/T5783-M6×12-F	BGB5783-M6×12-F	六角头螺栓M6×12		2	